CATALOG

fieldbus

Fieldbus Electronics and I/O

numatics®

EMERSON™
Industrial Automation

www.numatics.com

AirAirOilSysteems, Inc. www.airoilsystems.com

Table of Contents

numatics®

Fieldbus Electronics and I/O 3-75

G2-1 Electronics 3-12

Features and Benefits 3
Communication Protocols 4-8
How to Order 9
AKC Communication Module 10
LH Mounting Cover Kit 10
Fieldbus Communication Module 11
Manual Configuration Module 11
I/O Module Assemblies 12
Flexiblok® Manifold Dimensional Drawing 13

G2-2 Electronics 14-42

Features and Benefits 14
Communication Protocols 15-25
Discrete I/O Modules 26
How to Order 27-31
Fieldbus Communication Module 32
Manual Configuration Module 33
I/O Block Assemblies 33-35
25 Pin Sub-D Connector Input 36
Dual 15 Pin Sub-D Connector Input 36
19 Pin M23 Circular Connector Digital I/O Module 37
25 Pin Sub-D Connector Output Module 38
Dual 25 Pin Sub-D Connector Output Module 38
Valve Side Sub-D Output Modules 39-40
Mounting Cover Assemblies 41
Dimensional Drawing 42

Individual Base Node 43-49

Features and Benefits 43
Communication Protocols 44-45
How to Order 46
Valve on Individual Base Node 47
Base Assemblies 48
Replacement Kits 49

Direct to PLC 50-56

Features and Benefits 50
I/O Modules Technical Data 51
How to Order 52-55
I/O Block Assemblies 56
25 Pin Sub-D I/O Module Assembly 57
Connector Kits 58

Cables and Accessories 59-75

Airic-DiSystems, Inc. www.airicdi.com

©Numatics 2006
Rev. 1/06

Information subject to change without notice. For ordering information or regarding your local sales office visit www.numatics.com.

G2-1 Fieldbus Communications Electronics

Why use Numatics Fieldbus communication electronics? ***Modular Reality...***

- No internal wiring
- Up to 40 valve solenoids
- Discrete I/O status with short circuit protection
- Software or manual configuration
- Plug-together flexibility
- Conformance tested
- Shorted and open load diagnostics
- Universal input technology allows NPN or PNP sensor types with same input module.
- NEMA4/IP65
- Up to 16 discrete output points and 16 input points per communication node
- Low cost distribution options
- Used with 2002 and 2004 Series

Supported Protocols:

- DeviceNet
- Allen Bradley 1771 Remote I/O
- Profibus DP 1.5 MBps & 12MBps
- DeviceLogix
- CANopen - Consult Factory
- AS-i - Consult Factory

Air-Pro Systems, Inc. www.airpro.com

DeviceLogix

DeviceLogix is a Rockwell Automation technology that allows a DeviceNet node to be programmed to execute a sequence independently from the control for the main PLC/IPC. A DeviceLogix enabled DeviceNet node can be used in conjunction with a standard DeviceNet network, providing simple distributed control functionality. Additionally, it can also be used in a standalone application, without a network connection or PLC/IPC, to sequence pneumatic valves and control I/O. Numatics has integrated this licensed technology into its DeviceNet compatible valve manifold series, which combine the functionality of a modular pneumatic valve system with integrated I/O.

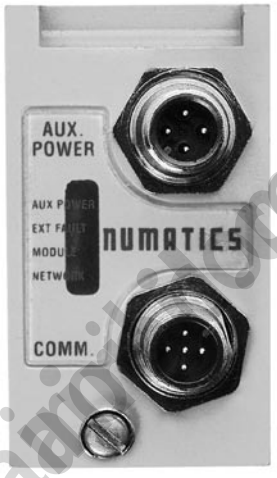

Programming of the DeviceLogix enabled node is done using the industry standard DeviceNet commissioning software tool RSNetworx for DeviceNet for Rockwell Automation. The programming software features an easily understandable graphics environment where the users can simply “drag and drop” logic function blocks (i.e. AND, NAND, OR, NOR, XOR, XNOR, RS LATCHES, COUNTERS and TIMERS) onto a page and interconnect them to develop the required sequence, or ladder logic programming can be used to develop a sequence. The programmed sequence is downloaded to the node via the standard DeviceNet communication connection, thus multiple nodes can be programmed simultaneously on the same network.

Technical Data

ELECTRICAL DATA	VOLTAGE	CURRENT
BUS Power	11-25 VDC	0.025 amps.
Valve & Discrete I/O	24 VDC +/- 10%	4 amps. maximum
Aux Power Connector	Single key 4 pin 12mm (Micro) connector	
Communication Connector	Single key 5 pin 12 mm (Micro) connector	
LED’s	Module status, Network status, Ext fault & Aux power and logic enabled	
OPERATING DATA		
Temperature Range	+32˚ to +115˚ F (0˚ to +46˚ C)	
Humidity	95% relative humidity, non-condensing	
Moisture	Designed to meet NEMA 4 / IP65 requirements	

CONFIGURATION DATA	
Communication Module	Contains all communication electronics as well as short circuit protected driver circuitry for up to 24 valve solenoids. Supports auto-baud detection and auto-device replacement (ADR) feature.
Manual Configuration Module (MCM)	Optional module for use when a manual configuration method is preferred.
Maximum Valve Solenoid Outputs	24 (2002 Series)
Maximum Discrete I/O Points	16

Numatics’ DeviceNet modules features Polled, Change of State (COS), Cyclic and combinations message capability.

Electronic Data Sheet (EDS) file and technical manuals are available in the download section of the Numatics, Inc. web site at: www.numatics.com/fieldbus

AirFlo Systems, Inc. www.airflo.com

Information subject to change without notice. For ordering information or regarding your local sales office visit www.numatics.com.

DeviceNet

DeviceNet is an open protocol bus communication system developed by Allen-Bradley based on Controller Area Network (CAN) technology.
The governing body for DeviceNet is the Open DeviceNet Vender Association (ODVA). The ODVA controls the DeviceNet specification and oversees product conformance testing.

Numatics G2-1 DeviceNet modes have been tested and approved for conformance by the ODVA.

More information about DeviceNet and the ODVA can be obtained from the following WEB site:

Open DeviceNet Vendors Association (ODVA)
www.odva.org

www.aiaiob.com
AiAiOiSSystems, Inc.

Technical Data

ELECTRICAL DATA	VOLTAGE	CURRENT
BUS Power	11-25 VDC	0.025 amps.
Valve & Discrete I/O	24 VDC +/- 10%	4 amps. maximum
Aux Power Connector	Single key 4 pin 12mm (Micro) connector	
Communication Connector	Single key 5 pin 12 mm (Micro) connector	
LED's	Module status, Network status, Ext fault & Aux power	
OPERATING DATA		
Temperature Range	+32˚ to +115˚ F (0˚ to +46˚ C)	
Humidity	95% relative humidity, non-condensing	
Moisture	Designed to meet NEMA 4 / IP65 requirements	

CONFIGURATION DATA	
Communication Module	Contains all communication electronics as well as short circuit protected driver circuitry for up to 24 valve solenoids. Supports auto-baud detection and auto-device replacement (ADR) feature.
Manual Configuration Module (MCM)	Optional module for use when a manual configuration method is preferred.
Maximum Valve Solenoid Outputs	24 (2002 Series), 16 (2004 Series)
Maximum Discrete I/O Points	16

Numatics' DeviceNet modules features Polled, Change of State (COS), Cyclic and combinations message capability.

Electronic Data Sheet (EDS) file and technical manuals are available in the download section of the Numatics, Inc. web site at: www.numatics.com/fieldbus

Allen Bradley 1771 Remote I/O

Allen-Bradley 1771 Remote I/O is a proprietary protocol based on a patented chipset.
This chipset is obtained from Allen-Bradley and incorporated into the Numatics RIO module.

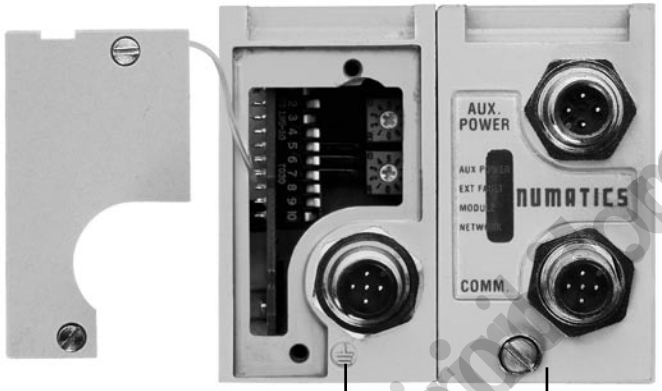

Communication Module

Manual Configuration Module (MCM) (Required)

Technical Data

ELECTRICAL DATA	VOLTAGE	CURRENT
Valve & Discrete I/O	24 VDC +/- 10%	4 amps. maximum
Aux Power Connector	Single key 4 & 5 pin 12mm (Micro) connector	
Communication Connector	Single key 5 pin 12 mm (Micro) connector, Bus IN and OUT	
LED's	Communications status, ext. fault and auxiliary power	
OPERATING DATA		
Temperature Range	+32˚ to +115˚ F (0˚ to +46˚ C)	
Humidity	95% relative humidity, non-condensing	
Moisture	Designed to meet NEMA 4 / IP65 requirements	

CONFIGURATION DATA	
Communication Module	Contains all communication electronics as well as short circuit protected driver circuitry for up to 24 valve solenoids.
Manual Configuration Module (MCM)	Module contains DIP and rotary switches for setting device configuration data
Maximum Valve Solenoid Outputs	24 (2002 Series), 16 (2004 Series)
Maximum Discrete I/O Points	16
Rack Size	Rack size is set automatically to 1/4 rack

This product incorporates technology which is licensed by Allen- Bradley Company, Inc. Allen-Bradley has not technically approved, nor does it warrant or support this product. All warranty and support for this product and its application is provided solely by Numatics, Incorporated.

AiAiOOiSSystems, Inc. www.aiaioo.com

Information subject to change without notice. For ordering information or regarding your local sales office visit www.numatics.com.

Profibus DP (1.5 MBps & 12 MBps)

Profibus-DP is a vendor-independent, open fieldbus designed for communication between automation control systems and distributed I/O at the device level.

The 2002 Series - Profibus product is designed to conform to the Profibus standard EN50170. Certification is by the Profibus Interface Center (PIC) according to the guidelines determined by the Profibus Trade Organization (PTO). The certification process ensures interoperability for all Profibus devices.

More information about Profibus can be obtained at the following web sites:

Profibus Interface Center
www.aut.sea.siemens.com/pic/index.htm

Profibus Trade Organization
www.profibus.com

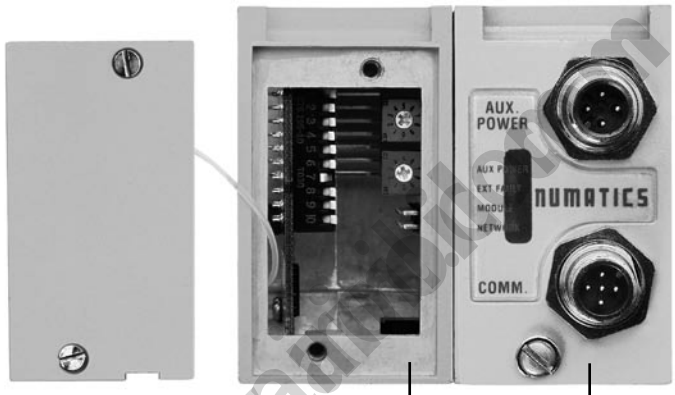

Manual Configuration Module (MCM)
(Not required with Class II Master)

Communication Module

Technical Data

ELECTRICAL DATA		VOLTAGE	CURRENT
Valve & Discrete I/O		24 VDC +/- 10%	4 amps. maximum
Aux. Power Connectors	1.5 MBps 12 MBps	Single key 4 pin 12 mm (Micro) connector Single key 4 pin 12 mm (Micro) connector	
Communication Connector	1.5 MBps 12 MBps	5 pin 12 mm (Micro) connector 5 pin reverse key female (Micro) connector	
LED's		Module status, Network status, Ext fault and Auxiliary power	
OPERATING DATA			
Temperature Range		+32˚ to +115˚ F (0˚ to +46˚ C)	
Humidity		95% relative humidity, non-condensing	
Moisture		Designed to meet NEMA 4 / IP65 requirements	

CONFIGURATION DATA	
Communication Module	Contains all communication electronics as well as short circuit protected driver circuitry for up to 24 valve solenoids.
Manual Configuration Module (MCM)	Module containing DIP and rotary switches for setting device configuration data.
Maximum Valve Solenoid Outputs	24
Maximum Discrete I/O Points	16, available with 12mm (micro) connectors or 25 pin sub-D styles

(GSD) File and technical manuals are available in the download section of the Numatics, Inc.
website at: www.numatics.com/fieldbus.

Air-Oil Systems, Inc. www.airoil.com

Discrete I/O Modules

Discrete I/O modules are used to connect additional I/O devices to the valve manifold node. This provides for more efficient use of system resources when configuring an industrial network system.

Universal input modules feature technology that allows the same module to automatically recognize PNP or NPN type sensors without the need to add external pull-up resistors or manually select sensor type.

Input and output modules have two 12mm (micro) connectors. Each can be used individually (i.e. 1 I/O point per connector) or can be used for double point (i.e. connector 1 has two points of I/O). This standard feature further simplifies external I/O wiring.

Sub-D output module can be used to drive 16 additional coils on a separate manifold or 16 discrete output points.

Sub-D I/O module can be used for inputs and or up to a total of 16 I/O points.

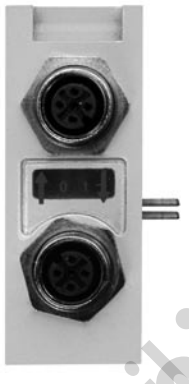

Discrete I/O

Sub-D I/O

AMCO Systems, Inc. www.amcoi.com

Technical Data

ELECTRICAL DATA	
Inputs:	
Supply Voltage	24 VDC ± 10%
Type	Sourcing (PNP), Sinking (NPN) or contact closure (universal input technology)
LED Indicator	Input status
Outputs:	
Voltage	24 VDC +/- 10%
Current	0.5 amperes per output (4A max. per manifold)
Type	Sinking (NPN)
LED Indicator	Output status

OPERATING DATA	
Temperature Range	+32˚ to +115˚ F (0˚ to +46˚ C)
Humidity	95% relative humidity, non-condensing
Moisture	Designed to meet NEMA 4 / IP65 requirements
Connectors	Single key 5 pin female 12mm (micro) connector or 25 pin sub-D female

CONFIGURATION DATA

The maximum number of modules connected to the discrete I/O side is 8. A fully configured manifold assembly would require 2 master modules with 6 slaves.

Information subject to change without notice. For ordering information or regarding your local sales office visit www.numatics.com.

How to Order

1) Assembly Kit Selection

A K C 6 _ 0 0 0 0 _ _ _

Electrical / Electronic Type & Location
C = Communication Module

Valve Series
6 = 2002 Series
D = 2004 Series

Number of Valve Stations*

A	= 1	I	= 9	Q	= 17
B	= 2	J	= 10	R	= 18
C	= 3	K	= 11	S	= 19
D	= 4	L	= 12	T	= 20
E	= 5	M	= 13	U	= 21
F	= 6	N	= 14	V	= 22
G	= 7	O	= 15	W	= 23
H	= 8	P	= 16	X	= 24

Options
STD = Standard
DRM = DIN Rail Mounting (Std. 35mm)
MUF = Muffler in End Plates
DWM= DIN Rail with MUF
A01 = 25 Pin Sub-D 16 Discrete Outputs Sinking (NPN)
D01 = A01 + DRM
D03 = A01 + MUF
F01 = A01 + DRM + MUF
A17 = 25 Pin Sub-D 16 I/O Points Inputs Sourcing (PNP) Outputs Sinking (NPN)
D18 = A17 + DRM
D19 = A17 + MUF
F07 = A17 + DRM + MUF

Port Type
L = Push In
D = Barbed Fitting

End Plate Port Size
2 = 1/4
H = 8mm (5/16)

* Maximum number of valve stations is determined by the combination of single and double Z-Boards types installed in the manifold sub-bases.

2) Valve Model Number Selection

Valve model number with plug-in manifold base.

3) Electronic Interface

N X 6 _ _ _ D F E02

Valve Series
6 = 2002 Series
D = 2004 Series

Fieldbus Protocols
DN = DeviceNet™
AB = Allen Bradley RIO
PB = Profibus DP 1.5 MBps
PT = Profibus DP 12 MBps
DL = DeviceLogix

Number of Discrete Inputs**

Number of Discrete Outputs**

Options
E02 = Separate Power (Valve and I/O)
G08 = With MCM if Not Standard (DN only)
G20 = Without MCM if Not Standard (PB & PT only)

Voltage
F = 24 VDC

I/O Type
D = Digital

**4) I/O Per I/O Station – Electronic Interface Option Only (See I/O table below)

When ordering up to eight (8) I/O you must order one (1) Master I/O (which contains two (2) points I/O itself). The balance required is made up of Slaves, two (2) points per I/O station (total 3 Slave modules). A maximum of sixteen (16) I/O points can be configured by using two (2) Master modules and six (6) Slave modules. Total number of discrete inputs plus total number of discrete outputs must be less than or equal to 16. (See I/O table below).

Input master modules can be used with Output Slave Modules.

Output master Modules can be used with Input Slave Modules.

Sub-D outputs and I/O types do not require additional master modules when used alone

I/O Table: Note 2 I/O per station

HOUSING TYPE	SINKING (NPN) OUTPUT	SINKING (NPN) or SOURCING (PNP) INPUT
Master Kit No.	239-1800	239-1802
Slave Kit No.	239-1801	239-1803

Airtech Systems, Inc. www.airtech.com

AKC Communication Module

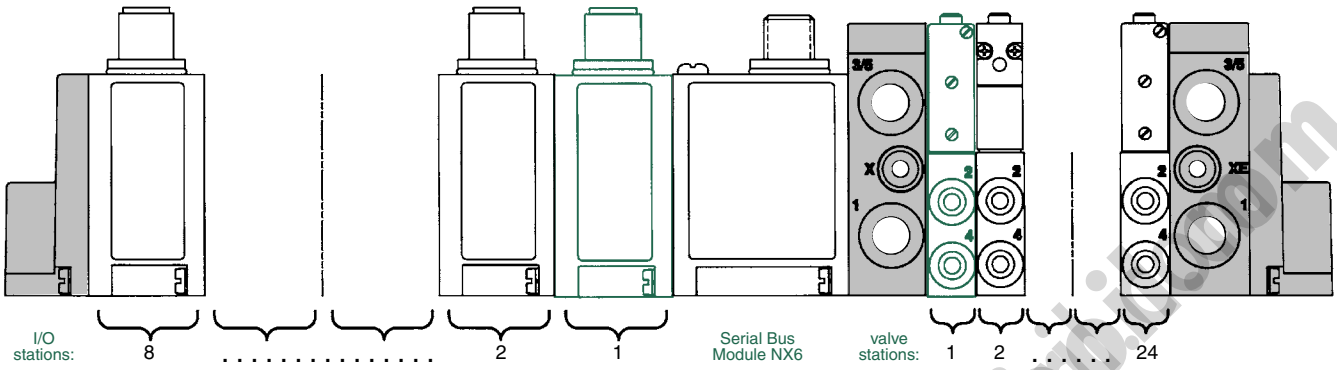

- Shaded components described by Assembly Kit (AK) model number designation *(see #1, pg. 8)*, with the exception of the Communication module and number of I/O stations that are described by Electronic Interface (NX6) model number designation. *(see #3, pg. 8)*
- Each valve manifold station is listed in sequential order from left to right when facing the port side of the manifold as indicated.
- Each discrete I/O station is listed in sequential order from RIGHT to LEFT starting from the Communication module as indicated.

  NOTE: I/O stations #1 and #5 (if required) must always be a MASTER KIT. *(see #4, pg. 8)*

  Stations 2,3,4,6,7 and 8 must be either input or output Slave kits.

NOTE: Total of 24 solenoid outputs available for 2002 Series. Either 24 single solenoid valves or 12 double solenoid valves or any combination of singles or doubles, not to exceed 24 solenoid outputs for AKC Serial/Bus are allowed.
NOTE: Total of 16 solenoid outputs available for 2004 Series.

Example order:	AKC6D00002LSTD
	021BW4Z3MK00061
	021BW4Z3MK00061
	021BB4Z4MK00061
	021BB4Z4MK00061
	NX6DN0808DFE02
I/O station 1	239-1802Input Master Sinking (NPN) Kit
I/O station 2	239-1803Input Slave Sinking (NPN) Kit
I/O station 3	239-1803Input Slave Sourcing (PNP) Kit
I/O station 4	239-1803Input Slave Sourcing (PNP) Kit
I/O station 5	239-1800Output Master Sinking (NPN) Kit
I/O station 6	239-1801Output Slave Sinking (NPN) Kit
I/O station 7	239-1801Output Slave Sinking (NPN) Kit
I/O station 8	239-1801Output Slave Sinking (NPN) Kit
	ASSEMBLED

LH Mounting Cover Kit

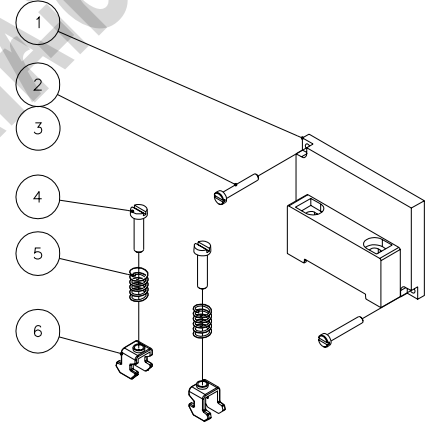

DET. NO.	NO. REQ'D	PART NAME	PART NO.
1	1	LH DIN Rail Mtg Cover	105-381
2	2	Screw	127-844
3	2	Lockwasher	128-192
4	2	Screw	127-472
5	2	Spring	115-355
6	2	Clamp	125-720

LH MOUNTING COVER KIT	PART NO.
With DIN Rail	239-1819
Without DIN Rail	239-1820

Air Logic Systems, Inc. www.airlogic.com

Information subject to change without notice. For ordering information or regarding your local sales office visit www.numatics.com.

Fieldbus Communication Module and Manual Configuration Module Assemblies

Communication Module

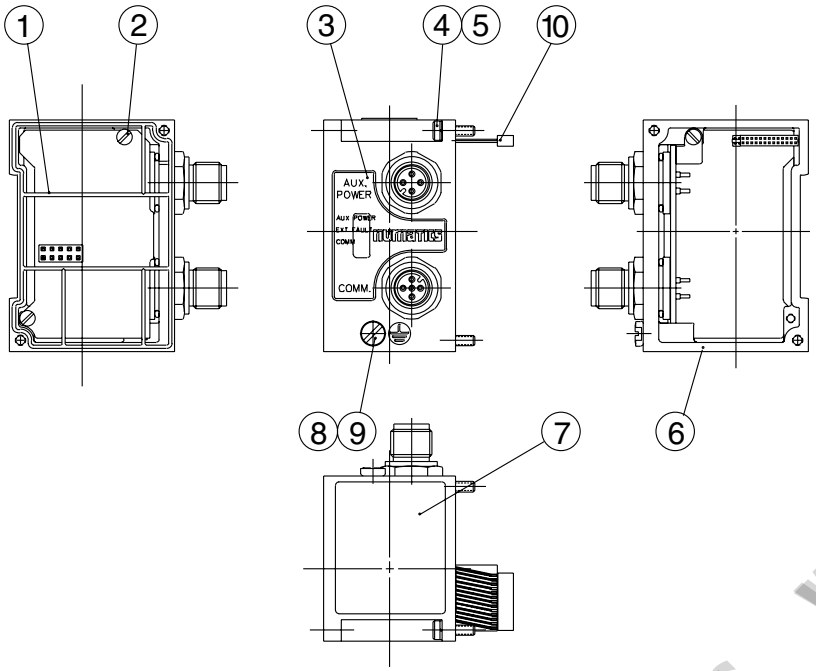

DET. NO.	NO. REQ'D	PART NAME	PART NO.
1	1	Gasket	113-503
2	3	Screw	127-794
3	1	Nameplate (DeviceNet)	122-1122
3	1	Nameplate (Profibus)	122-1123
3	1	Nameplate (Allen Bradley RIO)	122-1124
4	2	Screw	127-795
5	2	Lockwasher	128-192
6	1	Housing	125-1017
7	1	Nameplate	122-1058
8	1	Screw	127-176
9	1	Cup Washer	128-162
10	1	Transfer Board (2002)	256-589
	1	Transfer Board (2004)	256-552

Communication Module Kits (w/o End Plates)

	PART NO.	
DESCRIPTION	2002	2004
AB 1771 RIO	239-1804	239-1807
AS-i	Consult Factory	Consult Factory
CANopen	Consult Factory	Consult Factory
DeviceLogix	239-2108	Consult Factory
DeviceNet	239-1794	239-1684
Profibus 1.5 Mbps	239-1805	239-1808
Profibus 12 Mbps	239-1806	239-1809

Manual Configuration Module (MCM)

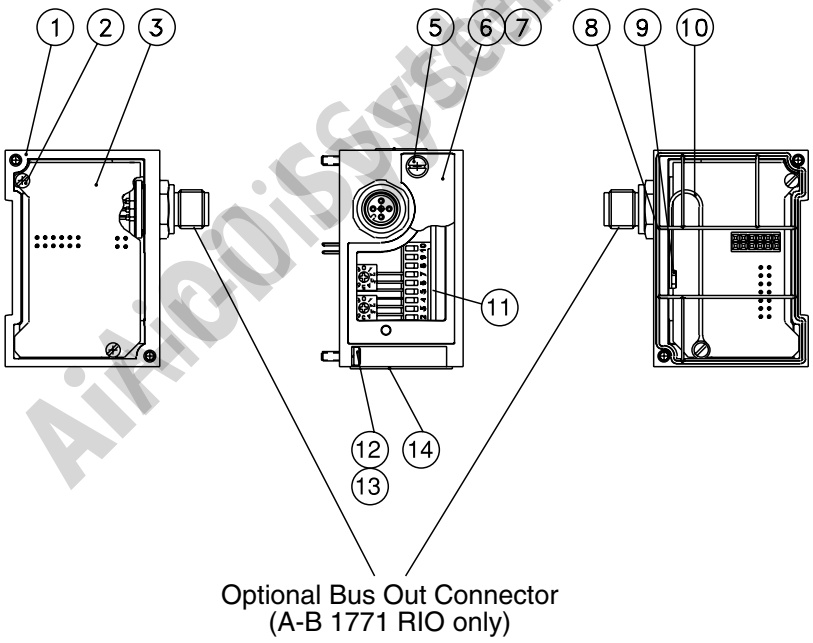

DET. NO.	NO. REQ'D	PART NAME	PART NO.
1	1	Switch Housing w/ conn.	125-800
1	1	Switch Housing w/o conn.	125-1038
2	4	Screw	127-794
5	2	Screw	127-852
6	1	Cover w/ conn.	105-399
6	1	Cover w/o conn.	105-384
7	1	Gasket w/conn.	113-529
7	1	Gasket w/o conn.	113-508
8	1	Gasket	113-503
9	1	Screw	127-172
10	1	Cover Strap	125-772
12	2	Screw	127-795
13	2	Lockwasher	126-192
14	1	Nameplate (Conn Ver. Only)	122-1058

Manual Configuration Module Kits (w/o End Plates)

DESCRIPTION	PART NO.
With Connector (A-B 1771 RIO only)	239-1812
Without Connector	239-1813

AirNOiSystems, Inc. www.airnoi.com

I/O Modules Assemblies

I/O Module Kit with Input LED Indicator (2 I/O per module)

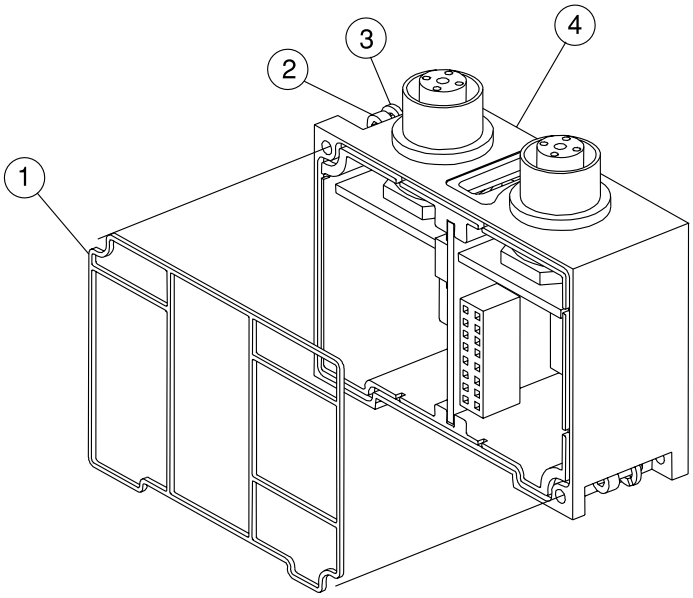

DET. NO.	NO. REQ'D	PART NAME	PART NO.
1	1	Gasket	113-503
2	2	Screw	127-795
3	2	Lockwasher	128-192
4	1	Housing	125-807

HOUSING TYPE	OUTPUT
Master Kit No.	
Output - Sinking (NPN)	239-1800
Input - Sinking (NPN) or Sourcing (PNP)	239-1802
Slave Kit No.	
Output - Sinking (NPN)	239-1801
Input - Sinking (NPN) or Sourcing (PNP)	239-1803

Connector Type

I/O 12 mm (Micro) 5 Pin Female

25 Pin Female Sub-D Discrete Output and I/O Module

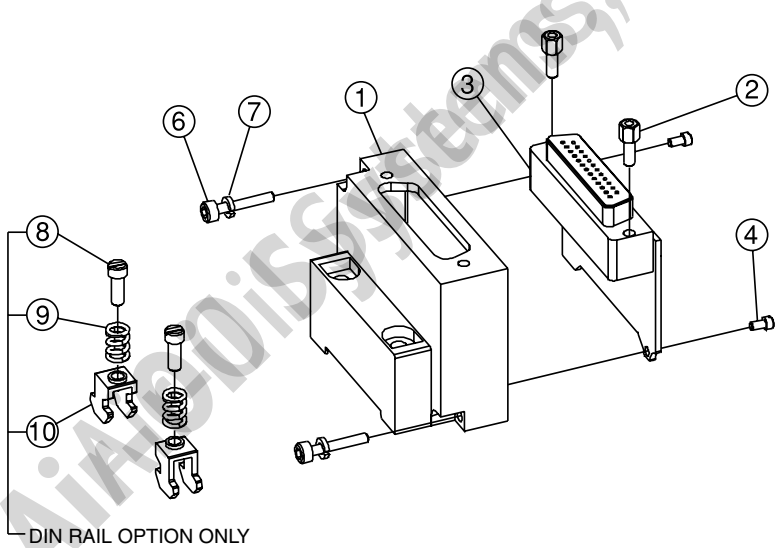

DIN RAIL OPTION ONLY

DET. NO.	NO. REQ'D	PART NAME	PART NO.
1	1	Housing	105-379
2	2	Hex Screw	127-825
3	1	Gasket	113-507
4	2	Screw	127-794
6	1	Nameplate	122-1057
7	2	Screw	127-499
8	2	Lockwasher	128-192
9	2	Screw (w/DIN)	127-472
10	2	Spring (w/DIN)	115-355
11	2	Clamp (w/DIN)	125-720

Discrete output and I/O Module Kit

DESCRIPTION	PART NO.
16 pt. Output Sinking (NPN) with DIN Rail	239-1225
16 pt. Output Sinking (NPN) w/o DIN Rail	239-1221
16 pt. Input Sourcing (PNP) and/or Output Sinking (NPN) with DIN Rail	239-1866
16 pt. Input Sourcing (PNP) and/or Output Sinking (NPN) w/o DIN Rail	239-1865

Note: When ordering this module in an assembled manifold "AK" use the corresponding option code in the "AK" model number. Do not list the module part number under the Electronic Interface model number "NX".

www.airboss.com
AirBoss Systems, Inc.

Information subject to change without notice. For ordering information or regarding your local sales office visit www.numatics.com.

FlexiBlok® Manifold with Fieldbus Electronics Dimensional Drawing

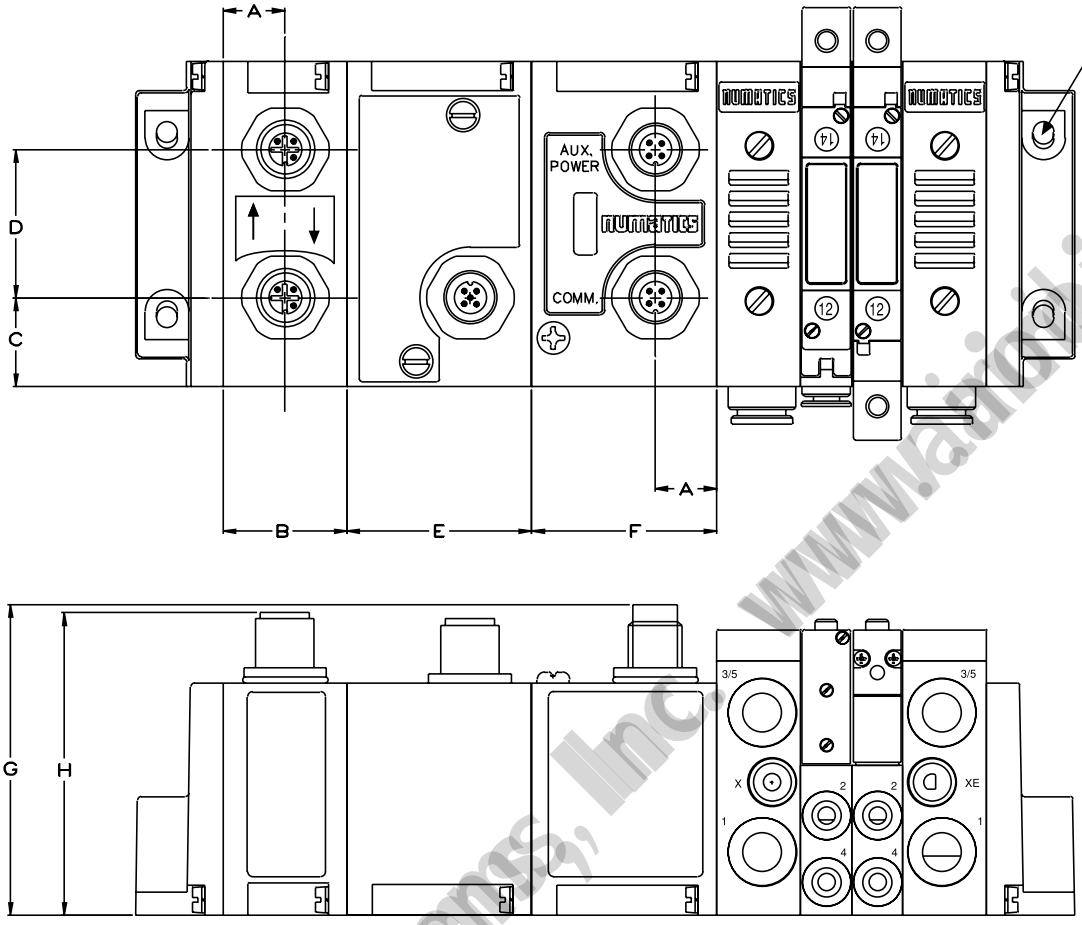

Dimensions

top dimensions = inches
bottom dimensions (in parenthesis) = millimeters

A	B	C	D	E	F	G	H
0.50 (12.7)	1.00 (25.4)	0.72 (18.3)	1.20 (30.5)	1.50 (38.1)	1.50 (38.1)	2.38 (60.5)	2.32 (59.0)

AirAutomation Systems, Inc. www.airautomation.com

G2-2 Fieldbus Communications Electronics

Why use Numatics Fieldbus communication electronics? ***Modular Reality***

- No internal wiring simplifies assembly
- Up to 192 discrete output points plus 32 valve solenoids and 96 input points per communication mode
- Enhanced diagnostics include discrete I/O status with short circuit protection
- Software or manual configuration simplifies commissioning
- Plug-together flexibility allows modularity and scalability
- Backplane technology allows fast maintenance
- Conformance tested ensures compatibility
- Shorted and open load diagnostics
- NPN and PNP discrete I/O modules
- NEMA 4/IP65 protected against water splash
- Low cost distribution options provide economic solutions for applications
- DIN rail mountable

Supported Protocols:

- Allen Bradley 1771 Remote I/O
- AS-i
- CANopen
- ControlNet
- DeviceNet
- DeviceNet with DeviceLogix
- EtherNet/IP
- FIPIO
- Interbus-S
- Modbus/TCP
- Profibus DP 1.5 MBps & 12MBps
- DeviceNet with Quickconnect

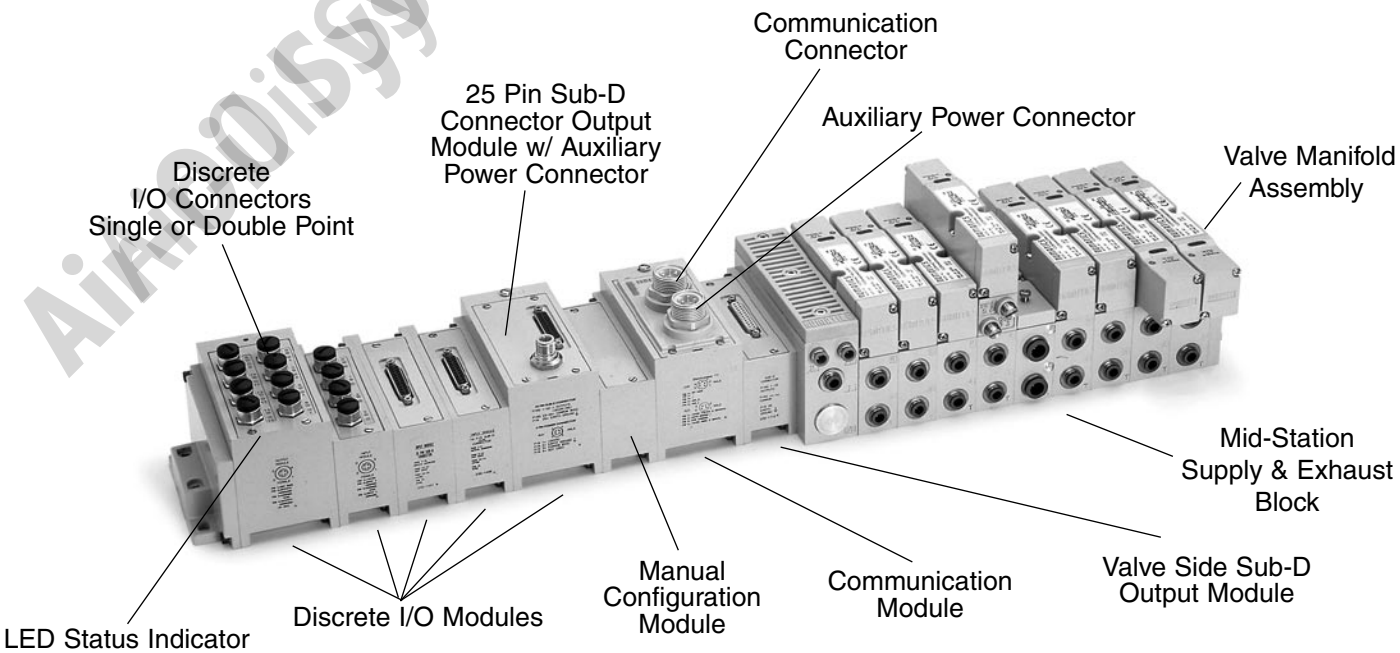

AirAutoDiSystems, Inc. www.airtrib.com

Information subject to change without notice. For ordering information or regarding your local sales office visit www.numatics.com.

Allen Bradley 1771 Remote I/O

Allen-Bradley 1771 Remote I/O is a proprietary protocol based on a patented chipset.
This chipset is obtained from Allen-Bradley and incorporated into the Numatics RIO module.

Numatics G2-2 Communications Node is capable of addressing up to 1 full rack of I/O.

Technical Data

ELECTRICAL DATA	VOLTAGE	CURRENT
Node Power	24 VDC ±	0.065 amps.
Valve & Discrete I/O	24 VDC +/- 10%	8 amps. maximum
Aux Power Connector	Single key 4 pin mini type	
Communication Connector	Single key 5 pin (Mini or Micro type) male	
LED's	Communications status, Fuse integrity and Aux. power status	
OPERATING DATA		
Temperature Range	-10˚ to +115˚ F (-23˚ to +46˚ C)	
Humidity	95% relative humidity, non-condensing	
Moisture	Designed to meet NEMA 4 / IP65 requirements	
CONFIGURATION DATA		
Communication Module	Contains all communication electronics as well as short circuit protected driver circuitry for up to 32 valve solenoids.	
Manual Configuration Module (MCM)	Module containing DIP and rotary switches for setting device configuration data.	
Maximum Valve Solenoid Outputs	32	
Maximum Discrete I/O Points	Various combinations of 110 outputs & 80 inputs	
Rack Size:	Rack size set automatically to 1/4, 1/2, 3/4, or full rack based on the I/O modules installed on the manifold assembly.	
NETWORK DATA		
Supported Baud Rates	57.6 K Baud, 115.2 K Baud and 230.4 K Baud	
Bus Connector	Single keyway 5 pin mini or 12mm micro type	
Special Features	Support for processor restart/lockout and hold last state	

This product incorporates technology which is licensed by Allen- Bradley Company, Inc. Allen-Bradley has not technically approved, nor does it warrant or support this product. All warranty and support for this product and its application is provided solely by Numatics, Incorporated.

AiAiOiSSystems, Inc. www.aiaioiSS.com

AS-i

AS-Interface (AS-i) is a simple bit level networking solution for actuators and sensors in manufacturing systems. It is an open technology supported by over 100 vendors worldwide, guaranteeing best-in-class solutions.

AS-i nodes are capable of addressing up to 4 input and 4 output points in standard mode or 4 inputs and 3 outputs in extended mode. Numatics' AS-i offering allows 4 modes to be placed in one manifold, thus allowing up to 16 inputs andd 16 valve solenoid coils on a single manifold.

For more information on AS-i visit the AS-i trade organization at www.as-interface.com

AirnodiSystems, Inc. www.airnodi.com

Technical Data

ELECTRICAL DATA	VOLTAGE	CURRENT
BUS Power	26.5 – 31.6 VDC	0.023 amps. per node
Valve Power	24 VDC +/- 10%	
Aux Power Connector	“AS-i cable clamp” IDC connector	
Communication Connector	“AS-i cable clamp” IDC connector	
LED’s	External Power, Bus Power and Error	
OPERATING DATA		
Temperature Range	-10° to +115° F (-23° to +46° C)	
Humidity	95% relative humidity, non condensing	
Moisture	Designed to meet NEMA 4 / IP65 requirements	
CONFIGURATION DATA		
Communication Module	Contains all communication electronics as well as short circuit protected driver circuitry for up to 16 valve solenoids and 16 inputs. AS-i nodes available with standard or enhanced addressing modes.	
Maximum Valve Solenoid Outputs	16 (with 4 AS-i nodes with standard addressing); 12 (with extended addressing)	
Maximum Discrete I/O Points	16 inputs (with 4 AS-i nodes with standard addressing); 16 (with extended addressing)	
NETWORK DATA		
Bus Connector	“AS-i cable clamp” IDC connector	

Electronic Data Sheet (EDS) file and technical manuals are available in the download section of the Numatics, Inc. web site at: www.numatics.com/fieldbus

Information subject to change without notice. For ordering information or regarding your local sales office visit www.numatics.com.

CANopen

CANopen is an open protocol based on Controller Area Network (CAN). It was designed for motion oriented machine control networks but has migrated to various industrial applications. CAN in Automation (CiA) is the international users' and manufacturers' organization that develops and supports CAN-based protocols. More information regarding this organization can be found at www.can-cia.org

AiAiC-DiSSystems, Inc. www.aiadi.com

Technical Data

ELECTRICAL DATA	VOLTAGE	CURRENT
Node Power	24 VDC +/- 10%	0.040 amps.
Bus Power	11-25 VDC	0.025 amps.
Valve & Discrete I/O	24 VDC +/- 10%	8 amps. maximum
Aux Power Connector	Single key 4 pin MINI type (male)	
Communication Connector	Single key 5 pin micro (12mm) type (male)	
LED's	Module Status, Network Status, Fuse integrity and Auxiliary power status	
OPERATING DATA		
Temperature Range	-10° to +115° F (-23° to +46° C)	
Humidity	95% relative humidity, non condensing	
Moisture	Designed to meet NEMA 4 / IP65 requirements	

CONFIGURATION DATA	
Communication Module	Contains all communication electronics as well as short circuit protected driver circuitry for up to 32 valve solenoids
Manual Configuration Module (MCM)	Module containing DIP and rotary switches for setting device configuration data. Comes standard with communication module
Maximum Valve Solenoid Outputs	32
Maximum Discrete I/O Points	Various Combinations of 160 outputs and 80 inputs
NETWORK DATA	
Supported Baud Rates	125K, 250K, 500K and 1M
Bus Connector	Single key 5 pin micro (12mm) type (male)
Diagnostics	Shorts and open load conditions from valve solenoid coils & outputs are monitored

Electronic Data Sheet (EDS) file and technical manuals are available in the download section of the Numatics, Inc. web site at: www.numatics.com/fieldbus

ControlNet

ControlNet is an open network that meets the demands of today's industrial applications requiring high speed (5 MBIT/sec.), high throughput with predictable and repeatable transfers of mission critical data.

Originally developed by Allen-Bradley, it is based on the Control and Information Protocol (CIP) technology. The governing body for the ControlNet technology is ControlNet International LTD.

More information about ControlNet can be obtained from the following website: www.controlnet.org

www.airoildirect.com
AirOilSystems, Inc.

Technical Data

ELECTRICAL DATA	VOLTAGE	CURRENT
Node Power	24V ± 10%	0.097 amps.
Valve & Discrete I/O	24 VDC +/- 10%	8 amps. maximum
Aux Power Connector	Single key 4 pin mini type (male)	
LED's	Module owned, Module status, Channel A & B, Fuse integrity & Aux power status	
Communication Connector	BNC Type	

OPERATING DATA	
Temperature Range	-10˚ to +115˚ F (-23˚ to +46˚ C)
Humidity	95% relative humidity, non-condensing
Moisture	Designed to meet NEMA 4 / IP65 requirements with proper connector hoods

CONFIGURATION DATA	
Power Module	Contains power interface electronics as well as short circuit protected driver circuitry for up to 32 valve solenoids.
Comm. Interface Module	Contains communication interface electronics and network address (MAC ID) configuration hardware.
Maximum Valve Solenoid Outputs	32
Maximum Discrete I/O Points	Various combinations of 192 outputs & 96 inputs

NETWORK DATA	
Supported Baud Rates	5 MBIT/sec
Connectors	BNC type for network; RJ-45 for Network Access Point (NAP)
Diagnostics	Shorts & open load conditions from valve solenoid coils & outputs are monitored
Special Features	Support for redundant media via 2 BNC connectors

Electronic Data Sheet (EDS) file and technical manuals are available in the download section of the Numatics, Inc. web site at: www.numatics.com/fieldbus

Information subject to change without notice. For ordering information or regarding your local sales office visit www.numatics.com.

DeviceLogix

DeviceLogix is a Rockwell Automation technology that allows a DeviceNet node to be programmed to execute a sequence independently from the control for the main PLC/IPC. A DeviceLogix enabled DeviceNet node can be used in conjunction with a standard DeviceNet network, providing simple distributed control functionality. Additionally, it can also be used in a standalone application, without a network connection or PLC/IPC, to sequence pneumatic valves and control I/O. Numatics has integrated this licensed technology into its DeviceNet compatible valve manifold series, which combine the functionality of a modular pneumatic valve system with integrated I/O.

Programming of the DeviceLogix enabled node is done using the industry standard DeviceNet commissioning software tool RSNetworx for DeviceNet for Rockwell Automation. The programming software features an easily understandable graphics environment where the users can simply “drag and drop” logic function blocks (i.e. AND, NAND, OR, NOR, XOR, XNOR, RS LATCHES, COUNTERS and TIMERS) onto a page and interconnect them to develop the required sequence, or ladder logic programming can be used to develop a sequence. The programmed sequence is downloaded to the node via the standard DeviceNet communication connection, thus multiple nodes can be programmed simultaneously on the same network.

AriesDiSystems, Inc. www.ariesdi.com

Technical Data

ELECTRICAL DATA	VOLTAGE	CURRENT
Node Power	24 VDC +/- 10%	
Bus Power	11-25 VDC	0.025 amps
Valve & Discrete I/O	24 VDC +/- 10%	8 amps. maximum
Aux Power Connector	Single key 4 pin mini type (male)	
Communication Connector	Single key 5 pin (Mini type) male	
LED’s	Module status, Network status, Auxiliary power status, Fuse integrity and Logic enabled.	
OPERATING DATA		
Temperature Range	-10˚ to +115˚F (-23˚ to +46˚C)	
Humidity	95% relative humidity, non-condensing	
Moisture	Designed to meet NEMA 4 / IP65 requirements	
CONFIGURATION DATA		
Comm. Interface Module	Contains all communication and control electronics as well as short circuit protected driver circuitry for up to 32 valve solenoids	
Maximum Valve Solenoid Outputs	32	
Maximum Discrete I/O Points	Various combinations of up to 80 outputs & 96 inputs; logical limit of 72 function block	
NETWORK DATA		
Supported Baud Rates	125 K Baud, 250 K Baud and 500 K Baud with auto-baud detection	
Connectors	Single key 5 pin mini or 12mm micro type (male)	
Diagnostics	Shorts and open load conditions from valve solenoid coils and outputs are monitored	
Special Features	Does not require a network connection for stand-alone applications	

Electronic Data Sheet (EDS) file and technical manuals are available in the download section of the Numatics, Inc. web site at: www.numatics.com/fieldbus

DeviceNet

DeviceNet is an open protocol bus communication system developed by Allen-Bradley based on Controller Area Network (CAN) technology. The governing body for DeviceNet is the Open DeviceNet Vendors Association (ODVA). The ODVA controls the DeviceNet specification and oversees product conformance testing.

Numatics G2-2 DeviceNet nodes are capable of addressing up to 192 output/96 input. They have been tested and approved for conformance by the ODVA.

More information about DeviceNet and the ODVA can be obtained from the following WEB site:
Open DeviceNet Vendors Association (ODVA)
www.odva.org

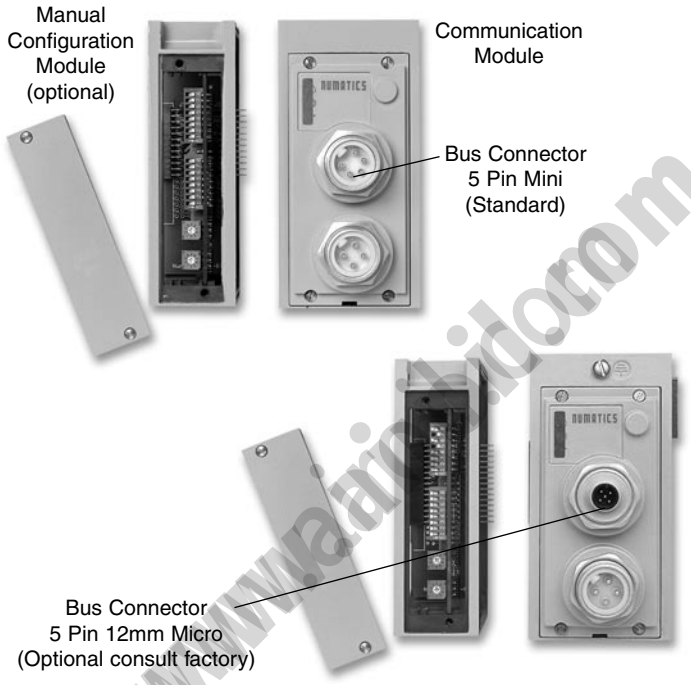

Technical Data

ELECTRICAL DATA	VOLTAGE	CURRENT
Node Power	24V ± 10%	0.040 amps.
BUS Power	11-25 VDC	0.025 amps.
Valve & Discrete I/O	24 VDC +/- 10%	8 amps. maximum
Aux Power Connector	Single key 4 pin mini type (male)	
Communication Connector	Single key 5 pin (Mini or Micro type) male	
LED's	Module status, Network status, Fuse integrity & Aux power status	
OPERATING DATA		
Temperature Range	-10˚ to +115˚ F (-23˚ to +46˚ C)	
Humidity	95% relative humidity, non-condensing	
Moisture	Designed to meet NEMA 4 / IP65 requirements	
CONFIGURATION DATA		
Communication Module	Contains all communication electronics as well as short circuit protected driver circuitry for up to 32 valve solenoids.	
Manual Configuration Module (MCM)	Optional module containing DIP and rotary switches for setting device configuration data. Note: Use option "G08" in "NX" model number	
Maximum Valve Solenoid Outputs	32	
Maximum Discrete I/O Points	Software configurable (standard): Various combinations of 192 outputs & 96 inputs With optional manual configuration module: Various combinations of 160 outputs & 80 inputs	
NETWORK DATA		
Supported Baud Rates	125 K Baud, 250 K Baud, 500 K Baud with Auto-Baud detection	
Supported Connection Types	Polled, Cyclic, Change of State (COS) and Combination Message Capability	
Bus Connector	Single keyway 5 pin mini or 12mm micro types (male)	
Diagnostics	Shorts & open load conditions from valve solenoid coils & outputs are monitored	
Special Features	Supports Auto-Device Replacement (ADR)	

Electronic Data Sheet (EDS) file and technical manuals are available in the download section of the Numatics, Inc. web site at: www.numatics.com/fieldbus

AirAid-DiSSystems, Inc. www.airaid-dd.com

Information subject to change without notice. For ordering information or regarding your local sales office visit www.numatics.com.

DeviceNet Quickconnect

Numatics G2-2 DeviceNet nodes are capable of addressing various combinations of up to 192 outputs and 96 inputs. They have been tested and approved for conformance by ODVA.

The DeviceNet with QuickConnect feature allows a reconnected Numatics G2-2 node on a DeviceNet network to quickly go into operation by shortening the time required to make the logical connection between the node and the scanner. This feature has benefits in many applications including those needing to make on the fly tool changes.

DeviceNet is an open protocol bus communication system by Allen-Bradley based on Controller Area Network (CAN) technology. The governing body for DeviceNet is the Open DeviceNet Vendors Association (ODVA). The ODVA controls the DeviceNet specification and oversees product conformance testing.

More information about DeviceNet and the ODVA can be obtained from www.odva.org

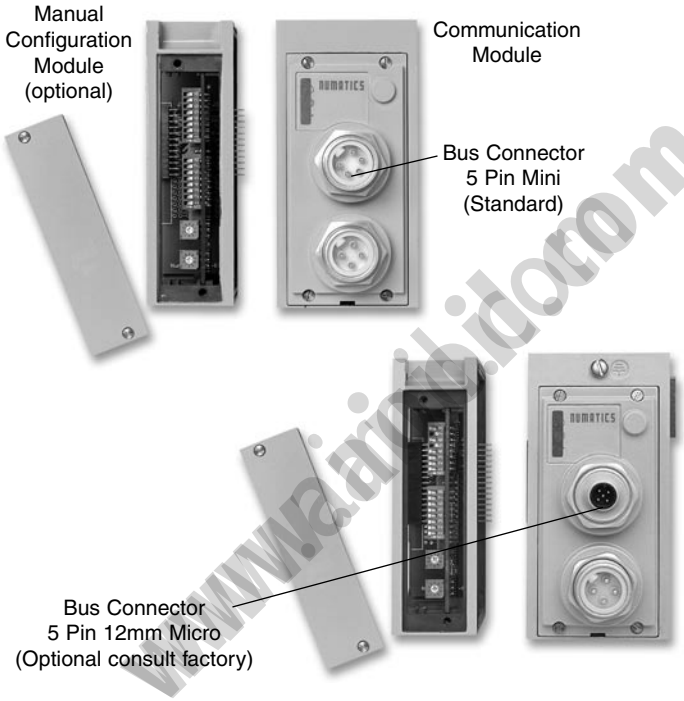

Technical Data

ELECTRICAL DATA	VOLTAGE	CURRENT
Node Power	24 VDC +/- 10%	0.040 amps.
Bus Power	11-25 VDC	0.025 amps.
Valve & Discrete I/O	24 VDC +/- 10%	8 amps. maximum
Aux Power Connector	Single key 4 pin MINI type (male)	
Communication Connector	Single key 5 pin MINI or 12mm micro type (male)	
LED's	Module Status, Network status, Fuse integrity and Auxiliary power status	
OPERATING DATA		
Temperature Range	-10° to +115° F (-23° to +46° C)	
Humidity	95% relative humidity, non condensing	
Moisture	Designed to meet NEMA 4 / IP65 requirements	
CONFIGURATION DATA		
Communication Module	Contains all communication electronics as well as short circuit protected driver circuitry for up to 32 valve solenoids	
Manual Configuration Module (MCM)	Optional module containing DIP and rotary switches for setting device configuration data. Note: Use option G08 in "NX" model number	
Maximum Valve Solenoid Outputs	32	
Maximum Discrete I/O Points	Various Combinations of 160 outputs and 80 inputs	
NETWORK DATA		
Supported Baud Rates	125K, 250K, 500K and Autobaud	
Supported Connection Types	Polled, Cyclic, Change of State (COS) and Combination Message Capability	
Bus Connector	Single key 5 pin MINI or 12mm micro type (male)	
Diagnostics	Shorts and open load conditions from valve solenoid coils & outputs are monitored	
Special Features	Supports Auto-Device Replacement (ADR)	

Electronic Data Sheet (EDS) file and technical manuals are available in the download section of the Numatics, Inc. web site at: www.numatics.com/fieldbus

AiAiCOiSSystems, Inc. www.aiaiid.com

Ethernet

Ethernet, used throughout the world to network millions of PC's has now evolved into a viable industrial network. Ethernet is an open architecture high-level communication network that meets the demands of today's industrial applications requiring high-speed (10/100 Mbit/s), high-throughput and flexibility. Various application layers for this protocol include **TCP/IP**, **EtherNet/IP**, and **Modbus TCP/IP**. Additionally, Ethernet technology can integrate an on-board Web Server, which can make the node readily accessible to any standard Web browser for configuration, testing and even retrieval of technical documentation. E-mail capability allows the manifold to send e-mails that are triggered from specific events ranging from diagnostic information to automatic Preventative Maintenance scheduling. Numatics has integrated this technology into the G2-2 series of fieldbus manifolds, which combines the functionality of a scalable modular I/O system with a modular pneumatic valve manifold.

AiAiOiSSystems, Inc. www.aiaiOi.com

Technical Data

ELECTRICAL DATA	VOLTAGE	CURRENT
Node Power	24 VDC +/- 10%	
Valve & Discrete I/O	24 VDC +/- 10%	
Aux Power Connector	Single key 4 pin mini type (male)	
LED's	Module status, Link, active, Net status, Auxiliary power status and Fuse integrity	
OPERATING DATA		
Temperature Range	-10˚ to +115˚F (-23˚ to +46˚C)	
Humidity	95% relative humidity, non-condensing	
Moisture	Designed to meet NEMA 4 / IP65 requirements	
CONFIGURATION DATA		
Power Module	Contains all power interface electronics as well as short circuit protected driver circuitry for up to 32 valve solenoids	
Comm. Interface Module	Contains all communication interfaced electronics	
Maximum Valve Solenoid Outputs	32	
Maximum Discrete I/O Points	Various combinations of up to 192 outputs & 96 inputs	
NETWORK DATA		
Supported Baud Rates	10 Mbit / 100 Mbit	
Connectors	RJ45 & M12 with "D Coding"	
Diagnostics	Shorts and open load conditions from valve solenoid coils and outputs are monitored	
Special Features	Integrated web server and e-mail capabilities	

Information subject to change without notice. For ordering information or regarding your local sales office visit www.numatics.com.

FIPIO

The FIPIO fieldbus is a standard protocol used to communicate between different control system components. It enables a maximum of 256 devices to be connected at the connection point integrated in the processor. This fieldbus conforms to the WorldFip standard based on producer/consumer mechanisms. It is designed to support both deterministic data-transfer and also random messaging.

Technical Data

ELECTRICAL DATA	VOLTAGE	CURRENT
Node Power	24 VDC +/- 10%	0.097 amps.
Valve & Discrete I/O	24 VDC +/- 10%	8 amps. maximum
Aux Power Connector	Single key 4 pin MINI type (male)	
Communication Connector	Single key 6 pin M23 type (male)	
LED's	Run, Error, I/O Comm., Fuse integrity and Auxiliary power status	
OPERATING DATA		
Temperature Range	-10° to +115° F (-23° to +46° C)	
Humidity	95% relative humidity, non condensing	
Moisture	Designed to meet NEMA 4 / IP65 requirements	
CONFIGURATION DATA		
Communication Module	Contains all communication electronics as well as short circuit protected driver circuitry for up to 32 valve solenoids	
Manual Configuration Module (MCM)	Contains communication interface electronics and network address configuration hardware.	
Maximum Valve Solenoid Outputs	32	
Maximum Discrete I/O Points	Various Combinations of 192 outputs and 96 inputs	
NETWORK DATA		
Supported Baud Rates	1 Mbit/s.	
Bus Connector	Single key 6 pin M23 type (male)	
Diagnostics	Shorts and open load conditions from valve solenoid coils & outputs are monitored	

AiAiO-DiSSystems, Inc. www.aiaioid.com

Interbus - S

Interbus-S is an open architecture, high performing, ring based fieldbus system used in many of today's industrial network applications. I/O data is transmitted in frames that provide simultaneous and predictable updates to all devices on the network.

More Information about Interbus-S can be obtained at the following Interbus-S Club web site: www.ibsclub.com.

AiAiOiSSystems, Inc. www.aiaiid.com

Technical Data

ELECTRICAL DATA	VOLTAGE	CURRENT
Node Power	24 VDC +/- 10%	
Valve & Discrete I/O	24 VDC +/- 10%	
Aux Power Connector	Single key 4 pin mini type (male)	
Communication Connector	9 pin Sub-D, Bus IN and Bus OUT	
LED's	TR, CC, RBDA, BA, Auxiliary power status and fuse integrity	
OPERATING DATA		
Temperature Range	-10˚ to +115˚ F (-23˚ to +46˚ C)	
Humidity	95% relative humidity, non-condensing	
CONFIGURATION DATA		
Power Module	Contains all power interface electronics as well as short circuit protected driver circuitry for up to 32 valve solenoids	
Comm. Interface Module	Contains all communication interfaced electronics	
Maximum Valve Solenoid Outputs	32	
Maximum Discrete I/O Points	Various combinations of up to 160 outputs & 96 inputs	
NETWORK DATA		
Supported Baud Rates	500 Kbit/s & 2 Mbit/s	
Connectors	Two 9 pin sub-d (1 male and 1 female)	
Diagnostics	Shorts and open load conditions from valve solenoid coils and outputs are monitored	

Information subject to change without notice. For ordering information or regarding your local sales office visit www.numatics.com.

Profibus DP

Profibus DP is a vendor-independent, open fieldbus protocol designed for communication between automation control systems and distributed I/O at the device level.

Numatics' G2-2 Profibus DP nodes are capable of addressing up to 164 outputs/96 inputs. They are designed and tested to conform to the Profibus standard EN50170. Certification is by the Profibus Interface Center (PIC) according to the guidelines determined by the Profibus Trade Organization (PTO). The certification process ensures interoperability for all Profibus devices.

More information about Profibus DP can be obtained at the following web site:

Profibus Trade Organization (PTO)
www.profibus.com/

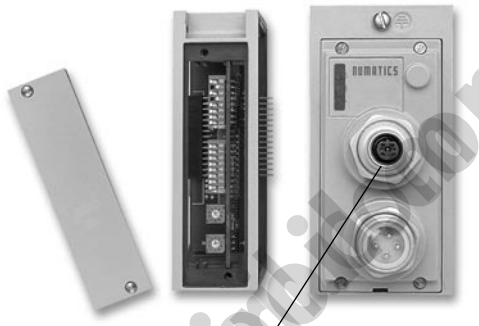

Bus Connector, 5 Pin 12mm
Micro Reverse Keyway

AiAiCoiSSystems, Inc. www.aiaiCoiSS.com

Technical Data

ELECTRICAL DATA	VOLTAGE	CURRENT
Node Power	24 VDC +/- 10%	0.120 amps.
Valve & Discrete I/O	24 VDC +/- 10%	8 amps. maximum
Aux. Power Connectors	Single key 4 pin Mini connector	
Communication Connector	5 pin reverse key female (Micro) connector	
LED's	Processor status, Network status, Fuse integrity & Aux power status	
OPERATING DATA		
Temperature Range	-10˚ to +115˚ F (-23˚ to +46˚ C)	
Humidity	95% relative humidity, non-condensing	
Moisture	Designed to meet NEMA 4 / IP65 requirements	
CONFIGURATION DATA		
Communication Module	Contains all communication electronics as well as short circuit protected driver circuitry for up to 32 valve solenoids.	
Manual Configuration Module (MCM)	Module containing DIP and rotary switches for setting device configuration data. To order without MCM, use option G20 in NX model number. Optional only when using a Class 2 Profibus DP Master. (Note: see ordering options *page 27*)	
Maximum Valve Solenoid Outputs	32	
Maximum Discrete I/O Points	Manual configurable with MCM (standard): Various combinations of 160 outputs & 96 Inputs Software configurable (optional): Various combination of 192 outputs and 96 inputs	
NETWORK DATA		
Bus Connector	Single reverse key 5 pin 12mm micro (female)	
Diagnostics	Shorts & open load conditions from valve solenoid coils & discrete outputs are monitored	
Special Features	Supports Class 2 Profibus DP Master with auto-configuration, and fail-safe device settings	

(GSD) file and technical manuals are available in the download section of the Numatics, Inc.
web site at: www.numatics.com/fieldbus

Discrete I/O Modules

Discrete I/O modules are used to connect additional I/O devices to the valve manifold node. This provides for more efficient use of system resources when configuring an industrial network.

Technical Data

ELECTRICAL DATA	
Inputs:	
Voltage	24 VDC
Type	NPN, PNP or contact closure
LED Indicator	Input status
Outputs:	
Voltage	24 VDC +/- 10%
Current	0.5 amperes per output with short circuit protection (consult factory for higher current requirements)
Type	Sinking (NPN) & Sourcing (PNP)
LED Indicator	Output status

OPERATING DATA	
Temperature Range	-10˚ to +115˚ F (-23˚ to +46˚ C)
Humidity	95% relative humidity, non-condensing
Moisture	Designed to meet NEMA 4 / IP65 requirements
Connectors	Single key 5 pin female 12mm (micro) 25 & 15 pin Sub-D or 19 Pin M23 circular connectors

CONFIGURATION DATA

The physical limitation of the discrete I/O section is 6 modules including the Manual Configuration Module.

	NARROW HOUSING				WIDE HOUSING			
Connectors per Block	4	4	1	2	8	8	1	2
I/O Points per Connector	1	2	16	8	1	2	22	16
Total I/O points	4	8	16	16	8	16	22	32

The maximum number of modules connected to the discrete I/O side is 6. A fully configured manifold assembly would require 6 Wide Profile Modules with double capacity per connector (i.e. 16 I/O points per module times 6 modules equals 96 I/O points). If a Manual Configuration Module is used (standard with A-B 1771 RIO & Profibus-DP), a maximum of five I/O modules may be installed and the maximum number of discrete I/O points is 80.

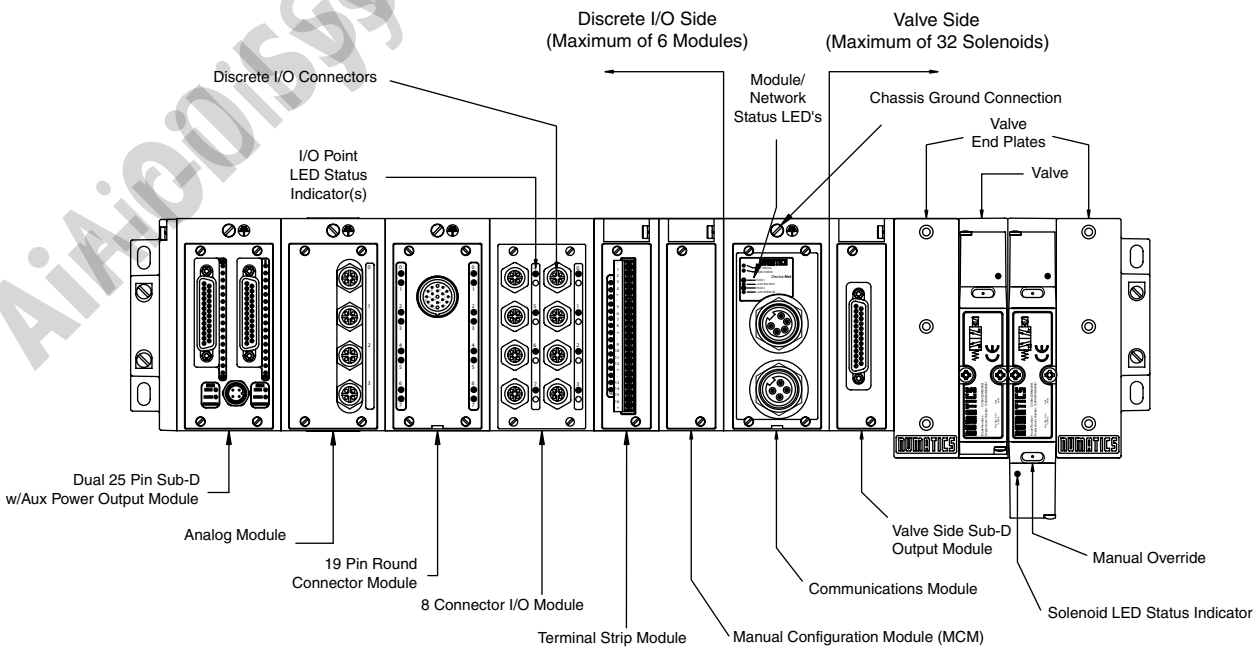

AirCOMSystems, Inc. www.aircom.com

How to Order

1) Assembly Kit Selection

Each valve station must specify valve type and configuration.

A K C E D 0 0 0 0 3 L STD

Electrical / Electronic Type & Location

C = Communication Module 2005, 2012 & 2035 Series or ISO 15407-2
E = Communication Module ISO 1, 2 & 3 Series and 2002 Series
V = Communication Module Mark 8, 15, 55 & 2009 Series

Valve Series

B = 2035 Series
E = 2005 or ISO 15407-2 18 mm
9 = 2009 Series
G = 2012 or ISO 15407-2 26 mm
H = Mark 8
J = Mark 15
M = Mark 55 Compact
P = Mark 55 Fullsize
Q = ISO 5599/2 Size 1
R = ISO 5599/2 Size 2
S = ISO 5599/2 Size 3
6 = 2002 Series

Number of Valve Stations*

A = 1	I = 9	Q = 17	Y = 25
B = 2	J = 10	R = 18	Z = 26
C = 3	K = 11	S = 19	2 = 27
D = 4	L = 12	T = 20	3 = 28
E = 5	M = 13	U = 21	4 = 29
F = 6	N = 14	V = 22	5 = 30
G = 7	O = 15	W = 23	6 = 31
H = 8	P = 16	X = 24	7 = 32

*Maximum number of valve stations is determined by the combination of single and double Z-Boards types installed in the manifold sub-bases. All G2-2 communication modules support 32 output drivers for valve solenoid coils.

Options

STD = Standard
DRM = DIN Rail Mounting
MUF = Muffler in End Plates
DWM= DIN Rail with MUF
A06 = End plate with ports on left end only, mounting plate only on right end
D10 = A06 w/DIN Rail Mounting
D11 = A06 w/Muffler in End Plates
F05 = A06 w/DIN Rail with MUF
14X = External Pilot
A05 = All Stations Wired as Doubles (AKV only)

Port Type

L = Push In (2005 or 2012 only)
N = NPTF
G = Metric

End Plate Port Size

2** = 2012 and 2009
3** = 2012, 2005, Mark 8, ISO 5599/2 Size 1
4 = Mark 15 or ISO 5599/2 Size 2 & 2035
5 = Mark 55 Compact
6 = ISO 5599/2 Size 3
7 = Mark 55 Fullsize
H** = 2012
K** = 2005 or 2012
** See chart below

2005	2012	
3 = 3/8	3 = Port Type G, N, or L	
K = 10mm tube	Port 1 = 3/8	Port 3/5 = 1/2
	2 = Port Type L Only	
	Port 1 = 1/4	Port 3/5 = 3/8
	H = Port Type L Only	
	Port 1 = 8mm	Port 3/5 = 12mm
	K = Port Type L Only	
	Port 1 = 10mm	Port 3/5 = 14mm

AiAiOiSSystems, Inc. www.aiaiod.com

How to Order continued

2) Fieldbus Electronics

Valve model number with plug-in manifold base (see model selection tables for the valve type).

N X G DN 16 08 D F E02

Fieldbus Protocols
AB = Allen Bradley RIO w/ MCM Standard
CN = ControlNet
CO = CANopen
DL = DeviceLogix
DN = DeviceNet™
DQ = DeviceNet w/ QuickConnect
EM = Modbus/TCP
EP = EtherNet/IP
FP = FIPIO
IS = Interbus-S
PT = Profibus DP w/ MCM Standard
Note: For AS-i, see chart below.

Number of
Discrete Inputs (See chart below if in excess of 99)

Number of
Discrete Outputs (See chart below if in excess of 99)

Options
E02 = Separate power standard (valve and I/O)
G08 = With Manual Configuration Module (if not standard) & E02
G10 = 12mm (Micro) Connector for Communications if Not Standard
G15 = Required for Mark 8, 15, 55 & 2006 Se
G18 = Valve side Sub-D NPN ouput module
G20 = Without Manual Configuration Module
G22 = Dual 15 Pin Sub-D output module
J03 = G15 plus Manual Configuration Module valve side
J18 = Dual 25 Pin Sub-D output module valve side
G26 = Cenelec Power Connection
J23 = Cenelec Power Connection and MCM

Voltage
F = 24 VDC

I/O Type
D = Digital
A = Analog
B = Analog and Digital

AS-i Table

STANDARD ADDRESSING	OUTPUTS	INPUTS
A1	4 Outputs	0 or 4
A2	8 Outputs	0, 4, or 8
A3	12 Outputs	0, 4, 8 or 12
A4	16 Outputs	0, 4, 8, 12 or 16
EXTENDED ADDRESSING	**OUTPUTS**	**INPUTS**
B1	3 Outputs	0 or 4
B2	6 Outputs	0, 4, or 8
B3	9 Outputs	0, 4, 8 or 12
B4	12 Outputs	0, 4, 8, 12 or 16

Note: AS-i can have a maximum of 16 discrete inputs and 0 discrete outputs.

3.) Discrete I/O Table for I/O In Excess of 99

I/O CODE	NUMBER OF I/0	I/O CODE	NUMBER OF I/0	I/O CODE	NUMBER OF I/0	I/O CODE	NUMBER OF I/0
A0	100	B0	110	C0	120	D0	130
A1	101	B1	111	C1	121	D1	131
A2	102	B2	112	C2	122	D2	132
A3	103	B3	113	C3	123		
A4	104	B4	114	C4	124		
A5	105	B5	115	C5	125		
A6	106	B6	116	C6	126		
A7	107	B7	117	C7	127		
A8	108	B8	118	C8	128		
A9	109	B9	119	C9	129		

4) Discrete I/O Station Selection *(see pages 23-31).*

AiAiCCiSSystems, Inc. www.aiaiccid.com

Information subject to change without notice. For ordering information or regarding your local sales office visit www.numatics.com.

When Ordering:

AKC Manifold Assembly Kit with G2-2 Fieldbus Electronics 2005, 2012 & 2035 Series and ISO 15407-2 Series

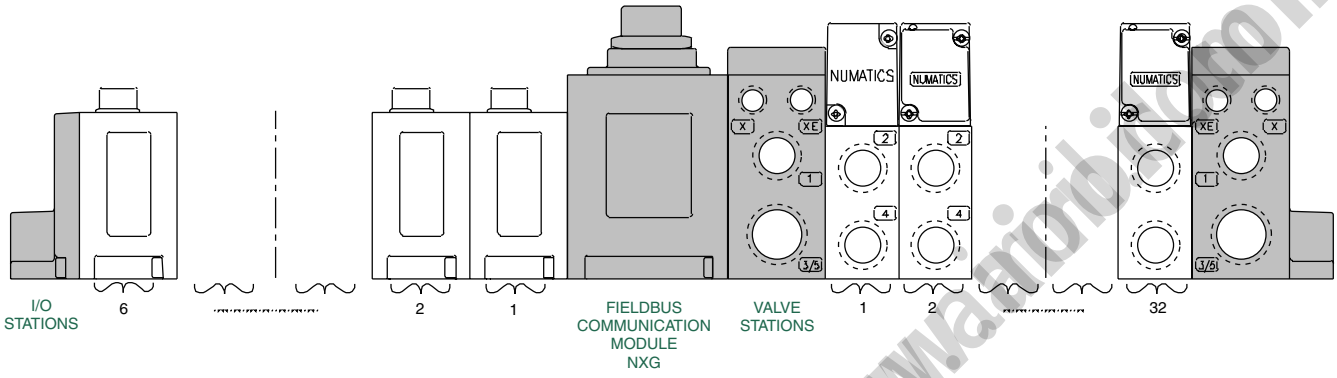

- Shaded components described by Assembly Kit (AK) model number designation *(see #1, pg. 27)*, with the exception of the communication module and number of I/O stations that are described by Electronic Interface (NXG) model number designation. *(see #3, pg. 28)*

- Each valve manifold station is listed in sequential order form left to right when facing the port side of the manifold as indicated.

- Each discrete I/O station is listed in sequential order from RIGHT to LEFT starting from the communication module as indicated.

NOTE:

1. Total of 32 solenoid outputs available. Either 32 single solenoid valves or 16 double solenoid valves or any combination of singles or doubles, not to exceed 32 solenoid outputs.

2. When ordering a manifold assembly that exceeds 16 solenoids, the model number of the valve station containing the 17th solenoid MUST use a selection for the 7th and 8th digits from the model selection table for the valve type.

3. For manifold assemblies that exceed 16 solenoids, the assembly MUST be configured so an even number of solenoids are utilized prior to the station using the ribbon cable feature. The 16th & 17th solenoid cannot be on the same valve.

Example Order: (2005)

	AKCEP00003NSTD
valve station 1	051BB4Z2MN00061
valve station 2	051BB4Z2MN00061
valve station 3	051BB4Z2MN00061
valve station 4	051BB4Z2MN00061
valve station 5	051BB4Z2MN00061
valve station 6	051BB4Z2MN00061
valve station 7	051BB4Z2MN00061
valve station 8	051BB4Z2MN00061
valve station 9	051BB4R2MN00061
valve station 10	051BB4Z2MN00061
valve station 11	051BB4Z2MN00061
valve station 12	051BB4Z2MN00061
valve station 13	051BB4Z2MN00061
valve station 14	051BB4Z2MN00061
valve station 15	051BB4Z2MN00061
valve station 16	051BB4Z2MN00061
	NXGDN6438DFE02
I/O station 1	239-1317
I/O station 2	239-1317
I/O station 3	239-1319
I/O station 4	239-1467
I/O station 5	239-1480
I/O station 6	239-1460
	ASSEMBLED

AiAiODiSSysteems, Inc. www.aiaiobild.com

When Ordering:

AKE
ISO 5599/2 and 2002 Series Manifold Assembly Kit with G2-2 Fieldbus Electronics (ISO 5599/2 Shown)

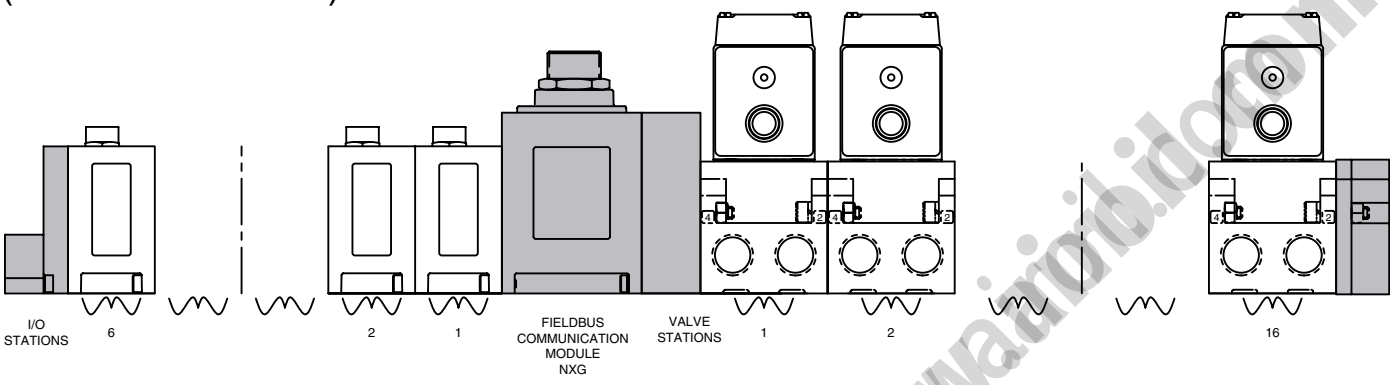

- Shaded components described by assembly Kit (AK) model number designation *(see #1, pg. 27)*, with the exception of the communication module and number of I/O stations that are described by Electronic Interface (NXG) model number designation. *(see #3, pg. 28)*

- Each valve manifold station is listed in sequential order form left to right when facing the port side of the manifold as indicated.

- Each discrete I/O station is listed in sequential order from RIGHT to LEFT starting from the communication module as indicated.

NOTE:

1. Total of 32 solenoid outputs available. Either 32 single solenoid valves or 16 double solenoid valves or any combination of singles or doubles, not to exceed 32 solenoid outputs.

2. When ordering a manifold assembly that exceeds 16 solenoids, the model number of the valve station containing the 17th solenoid MUST use a selection for the 7th and 8th digits from model selection table for the valve type.

3. For manifold assemblies that exceed 16 solenoids, the assembly MUST be configured so an even number of solenoids are utilized prior to the station using the ribbon cable feature. The 16th & 17th solenoid cannot be on the same valve.

Example Order: (ISO 5599/2)

	AKEQP00003NSTD
valve station 1	I13BB4Z2MN00061
valve station 2	I13BB4Z2MN00061
valve station 3	I13BB4Z2MN00061
valve station 4	I13BB4Z2MN00061
valve station 5	I13BB4Z2MN00061
valve station 6	I13BB4Z2MN00061
valve station 7	I13BB4Z2MN00061
valve station 8	I13BB4Z2MN00061
valve station 9	I13BB4R2MN00061
valve station 10	I13BB4Z2MN00061
valve station 11	I13BB4Z2MN00061
valve station 12	I13BB4Z2MN00061
valve station 13	I13BB4Z2MN00061
valve station 14	I13BB4Z2MN00061
valve station 15	I13BB4Z2MN00061
valve station 16	I13BB4Z2MN00061
	NXGDN6438DFE02
I/O station 1	239-1317
I/O station 2	239-1317
I/O station 3	239-1319
I/O station 4	239-1869
I/O station 5	239-1870
I/O station 6	239-1460
	ASSEMBLED

AirFlo Systems, Inc. www.airfloi.com

Information subject to change without notice. For ordering information or regarding your local sales office visit www.numatics.com.

When Ordering:

AKV Manifold Assembly Kit with G2-2 Fieldbus Electronics Mark 8, 15, 55 & 2009 Series

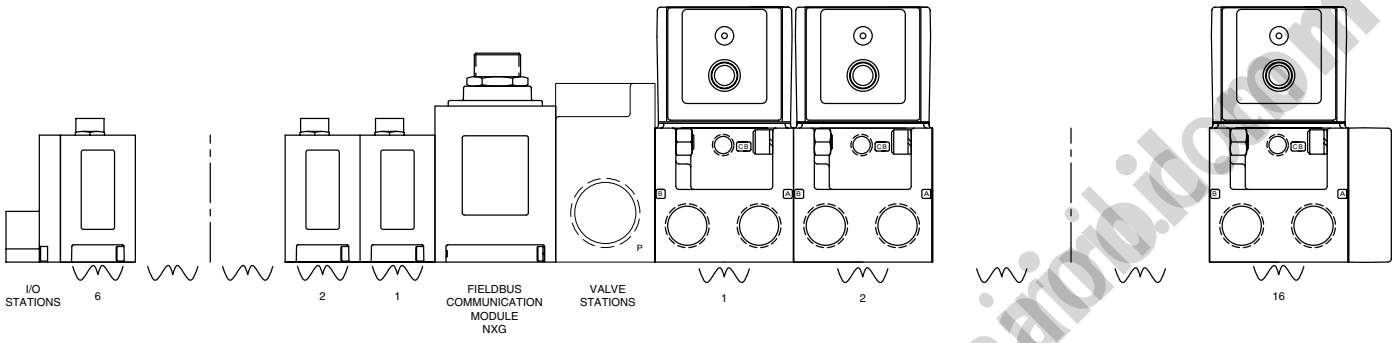

Mark 55 Shown

- Shaded components described by Assembly Kit (AK) model number designation *(see #1, pg. 27)*, with the exception of the communication module and number of I/O stations that are described by Electronic Interface (NXG) model number designation. *(see #3, pg. 28)*

- Each valve manifold station is listed in sequential order form left to right when facing the port side of the manifold as indicated.

- Each discrete I/O station is listed in sequential order from RIGHT to LEFT starting from the communication module as indicated.

NOTE:

1. Total of 32 solenoid outputs available. Either 32 single solenoid valves or 16 double solenoid valves or any combination of singles or doubles, not to exceed 32 solenoid outputs.
2. All valves must have a terminal block in the mounting (19M Option).
3. Valves will be wired based on the number of solenoids on the valve (1 output for a single solenoid valve and 2 for double(. If all stations are to be wired for double solenoid valves, option code “A05” must be used in the “AK” number.
4. All blank stations will be wired for double solenoid valves.
5. The NX number must use the “G15” option code for combination of.

Example Order: (Mark 15)

	AKVJF0004NAØ5
valve station 1	153SS415M019M61
valve station 2	153SA415M019M61
valve station 3	152SA400M000061
valve station 4	153RS115J019M00
valve station 5	153SS425M019M61
valve station 6	153SA425M019M61
valve station 7	153SS515M019M61
	NXGDN3232DFG15
I/O station 1	239-1994
I/O station 2	239-1317
I/O station 3	239-1871
	ASSEMBLED

Allied Systems, Inc. www.aiod.com

Fieldbus Communication Module and Manual Configuration Module Assemblies

Communication Module Kit

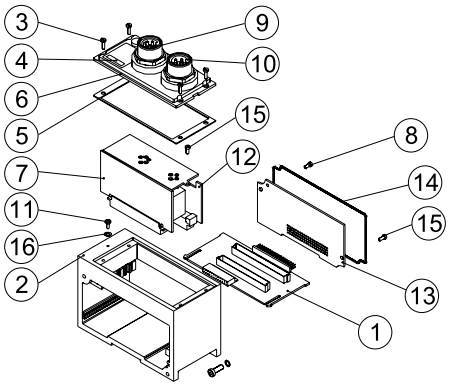

COMMUNICATION MODULE KIT	PART NO.	
	AKC, AKE	AKV
DeviceNet with Mini Comm. Connector (Standard)	239-1514	239-1461
DeviceNet with 12mm Comm. Connector	239-1827	239-1837
Allen-Bradley 1771 RIO with Mini Comm. Connector (Standard)	239-1516	239-1462
Allen-Bradley 1771 RIO with 12mm Comm. Connector	239-1520	239-1838
Profibus-DP (1.5 MBps) with 12mm Comm. Connector	239-1518	239-1463
Profibus-DP (12 MBps) with Reverse Key 12mm Comm. Connection	239-1519	239-1620
Interbus-S	239-2117	239-2118
ControlNet	239-1841	239-1842
DeviceLogix	239-2087	Consult Factory
Ethernet	239-2037	Consult Factory
FIPIO	239-2310	Consult Factory
DeviceNet QuickConnect	239-2389	Consult Factory
DeviceNet QuickConnect with Cenelec connector	239-2515	Consult Factory
DeviceNet with Cenelec connector	239-2498	Consult Factory

DET. NO.	NO. REQ'D	PART NAME	PART NO.
1	1	Backplane Board Ass'y (AKC, AKE)	256-666
		(AKV)	256-716
2	1	Housing (not sold separately)	
3	4	Screw	127-852
4	1	Cover Lens	122-1075
5	1	Gasket	113-533
6	1	Cover	105-416
7	1	Comm. Board Ass'y - DeviceNet w/ Cenelec	256-946
		Comm. Board Ass'y - DeviceNet QuickConnect	256-932
		Comm. Board Ass'y - DeviceNet QuickConnect w/ Cenelec	256-949
		Comm. Board Ass'y - DeviceNet	256-673
		Comm. Board Ass'y - AB1771-RIO	256-678
		Comm. Board Ass'y - Profibus-DP 1.5 & 12MBps	256-710
		Comm. Board Ass'y - DeviceLogix	256-849
		Comm. Board Ass'y - ControlNet	256-789
		Comm. Board Ass'y - EtherNet	256-848
8*	1	Screw	127-794
9	1	5 Pin "Mini" Conn. - DeviceNet & AB 1771-RIO	140-810
		5 Pin Conn. - Profibus DP 1.5MBps	140-847
		5 Pin 12mm male - DeviceNet & AB 1771 RIO	140-847
		5 Pin 12mm reverse key - Profibus DP 12MBPS	140-848
10	1	4 Pin Conn.	140-809
11	1	Ground Screw	127-176
12	1	Driver Board Ass'y	256-680
13*	1	Converter Board Ass'y	256-671
14	2	Gasket	113-531
15*	2	Ground Screw	127-318
16	1	Washer	128-162
	1	Valve & Output Fuse (10A)	140-934
	1	Node Input Fuse (4A)	140-933

*Not used with AKV kits.

AS-I standard addressing mode assemblies

VALVE COIL OUTPUTS	DISCRETE INPUTS	PART NUMBER
4	0	239-2055
4	4	239-2058
8	0	239-2056
8	4	239-2059
8	8	239-2060
12	0	239-2180
12	4	239-2181
12	8	239-2231
12	12	239-2232
16	0	239-2057
16	4	239-2177
16	8	239-2178
16	12	239-2179
16	16	239-2162

AS-I extended addressing module assemblies

VALVE COIL OUTPUTS	DISCRETE INPUTS	PART NUMBER
3	0	239-2171
3	4	239-2172
6	0	239-2166
6	4	239-2165
6	8	239-2164
9	0	239-2176
9	4	239-2175
9	8	239-2174
9	12	239-2173
12	0	239-2169
12	4	239-2168
12	8	239-2167
12	12	239-2170
12	16	239-2163

AirFlowDirect Systems, Inc. www.airflowdirect.com

Information subject to change without notice. For ordering information or regarding your local sales office visit www.numatics.com.

Manual Configuration Module (MCM) Kit 239-1384

(For All Protocols)

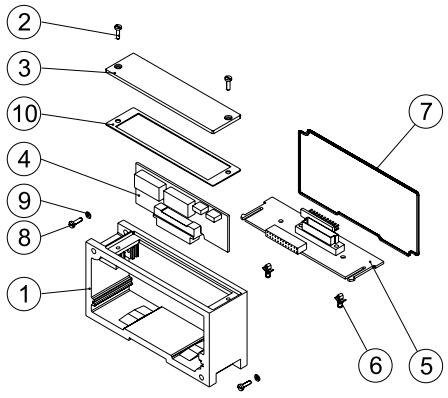

DET. NO.	NO. REQ'D	PART NAME	PART NO.
1	1	Housing (not sold separately)	
2	2	Screw	127-852
3	1	Cover	105-418
4	1	Switch Board Assembly	256-684
5	1	Switch Backplane	256-672
6	2	Support Pin	140-828
7	2	Gasket	113-531
8	2	Screw	127-697
9	2	Lockwasher	128-188
10	1	Gasket	113-532

- The MCM is an optional module that is used to manually configure communication parameters as well as allowing user access to self-test diagnostic functionality.

12mm I/O Block Assemblies
Digital Input/Output with SCP and Logical Diagnostics Module Kit

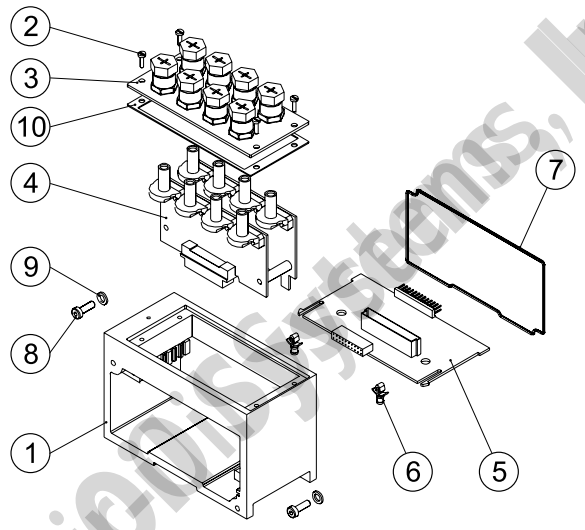

DET. NO.	NO. REQ'D	PART NAME	PART NO.
1	1	Housing (not sold separately)	
2	2	Screw	127-852
3	1	I/O Cover Assembly 8 I/O Points	205-381
	1	I/O Cover Assembly 16 I/O Points	205-382
4	1	I/O Board Ass'y	See Chart Below
5	1	I/O Backplane	256-665
6	2	Support Pin	140-828
7	1	Gasket	113-531
8	2	Screw	127-697
9	2	Lockwasher	128-188
10	1	Gasket	113-533
	1	I/O Connector Dust Cover	230-647

- These short circuit protected (SCP) I/O modules offer enhanced diagnostics. Sensor and/or cable short circuit conditions are detected and source power to sensor device is disabled while a visual and/or logical diagnostic bit is created back to the PLC/IPC.

DESCRIPTION	PART NO.
16 Input PNP w/ visual and logical diagnostics	239-2564
Replacement I/O Board for above	240-129
8 Input/ 8 Output PNP w/ visual and logical diagnostics	239-2522
Replacement I/O Board for above	240-127

AiAiODiSystems, Inc. www.aiaiodi.com

12mm I/O Block Assemblies

Digital Input/Output Module Kit 4/8

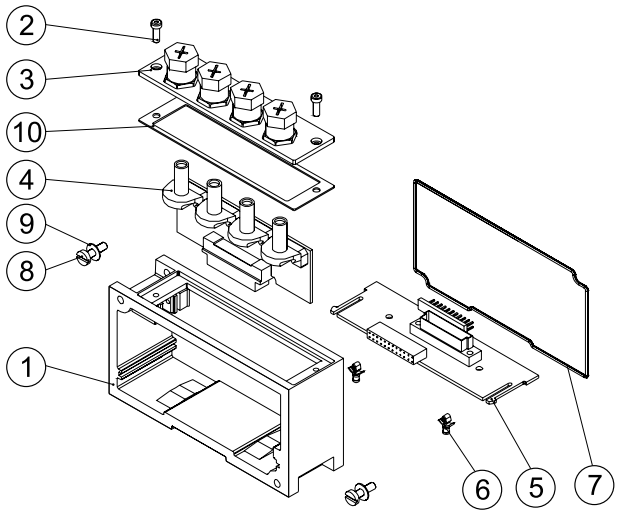

DET. NO.	NO. REQ'D	PART NAME	PART NO.
1	1	Housing (not sold separately)	
2	2	Screw	127-852
3	1	I/O Cover Assembly 4 I/O Points	205-377
	1	I/O Cover Assembly 8 I/O Points	205-378
4	1	I/O Board Ass'y	See Chart Below
5	1	I/O Backplane	256-672
6	2	Support Pin	140-828
7	1	Gasket	113-531
8	2	Screw	127-697
9	2	Lockwasher	128-188
10	1	Gasket	113-532
	1	I/O Connector Dust Cover	230-647

	4 INPUTS	4 OUTPUTS	8 INPUTS	8 OUTPUTS
Sinking (NPN)	239-1304	N/A	239-1308	N/A
Replacement I/O Board for above	240-100	N/A	240-104	N/A
Sourcing (PNP)	239-1305	239-1307	239-1309	239-1311
Replacement I/O Board for above	240-101	240-103	240-105	240-107

Digital Input/Output with SCP Module Kit 8/16

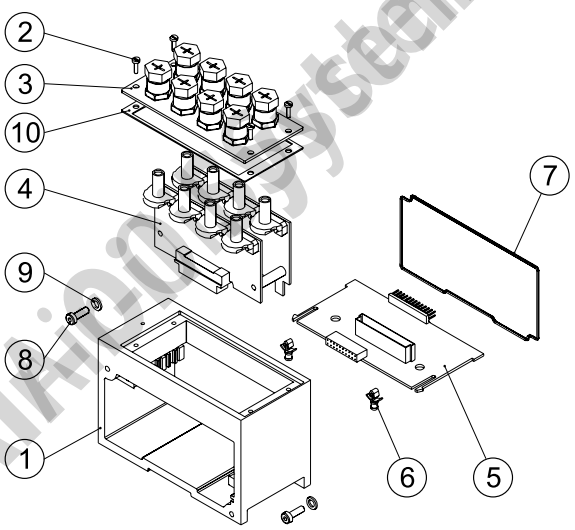

DET. NO.	NO. REQ'D	PART NAME	PART NO.
1	1	Housing (not sold separately)	
2	2	Screw	127-852
3	1	I/O Cover Assembly 8 I/O Points	205-381
	1	I/O Cover Assembly 16 I/O Points	205-382
4	1	I/O Board Ass'y	See Chart Below
5	1	I/O Backplane	256-665
6	2	Support Pin	140-828
7	1	Gasket	113-531
8	2	Screw	127-697
9	2	Lockwasher	128-188
10	1	Gasket	113-533
	1	I/O Connector Dust Cover	230-647

	8 INPUTS	8 OUTPUTS	16 INPUTS	16 OUTPUTS
Sinking (NPN)	240-130	N/A	240-132	N/A
Replacement I/O Board for above	240-134	N/A	240-136	N/A
Sourcing (PNP)	240-131	239-1315	239-2500	239-1319
Replacement I/O Board for above	240-135	240-112	240-125	240-116

- These short circuit protected (SCP) I/O modules offer enhanced diagnostics. Sensor and/or cable short circuit conditions are detected and source power to sensor device is disabled while a visual diagnostic created.

AirFlow Systems, Inc. www.airflowinc.com

Information subject to change without notice. For ordering information or regarding your local sales office visit www.numatics.com.

I/O Block Assemblies

Digital Terminal Strip Input/Output Module

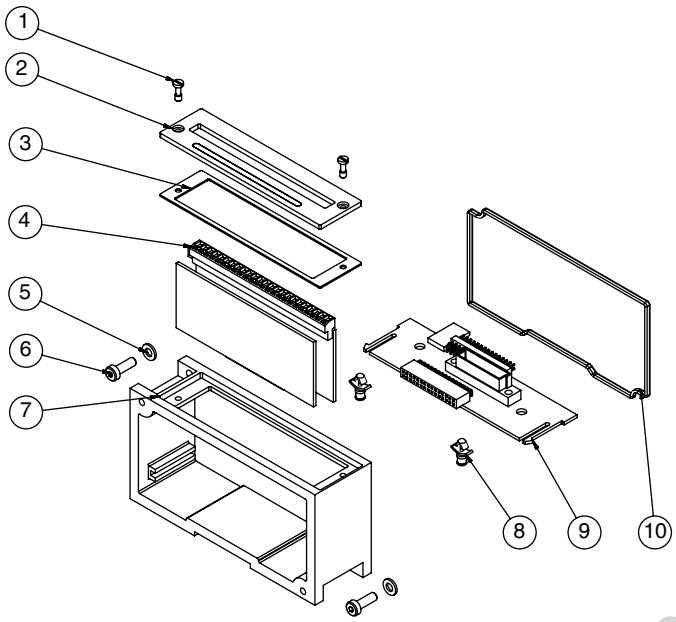

DET. NO.	NO. REQ'D	PART NAME	PART NO.
1	2	Screw	127-852
2	1	Cover	105-461
3	1	Gasket	113-532
4	1	16 I/O Terminal Strip Board	256-898
5	2	Lockwasher	128-188
6	2	Screw	127-697
7	1	Housing	125-1135
8	2	Support Pin	140-828
9	1	I/O Backplane Board	256-672
10	1	Gasket	113-531

	16 INPUTS	16 OUTPUTS
Sinking (NPN)	239-2304	N/A
Replacement I/O Board for above	256-894	N/A
Sourcing (PNP)	239-2311	239-2518
Replacement I/O Board for above	256-898	256-652

Analog 12mm Input/Output Module Kit

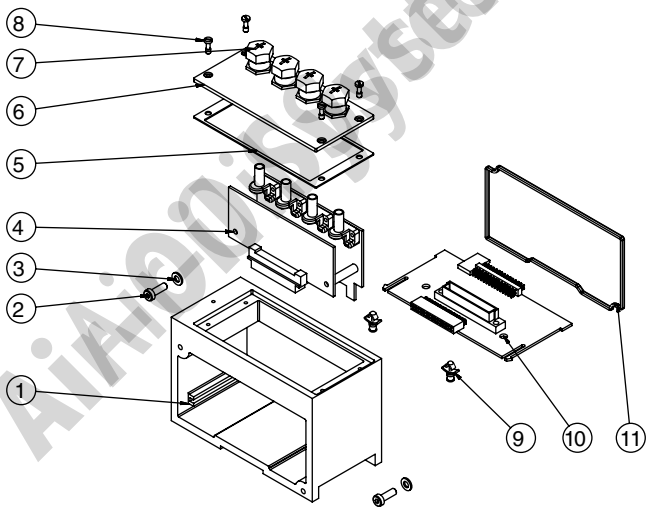

DET. NO.	NO. REQ'D	PART NAME	PART NO.
1	1	Housing	125-802
2	2	Screw	127-697
3	2	Lockwasher	128-188
4	1	I/O Board Assembly	256-863
5	1	Gasket	113-533
6	1	I/O Cover	105-455
7	1	I/O Connector Dust Cover	230-647
8	1	Screw	127-852
9	2	Support Pin	140-828
10	1	I/O Backplane Board Assembly	256-665
11	1	Gasket	113-531

	2 IN / 2 OUT	3 IN / 1 OUT
0-10V	239-2153	239-2154
Replacement I/O Board for above	240-118	240-119
0-5V	239-2155	239-2156
Replacement I/O Board for above	240-120	240-121
4-20 mA	239-2157	239-2158
Replacement I/O Board for above	240-122	240-123

AirAir Systems, Inc. www.airairb.com

25 Pin Sub-D Connector Digital Input Module (16 inputs)

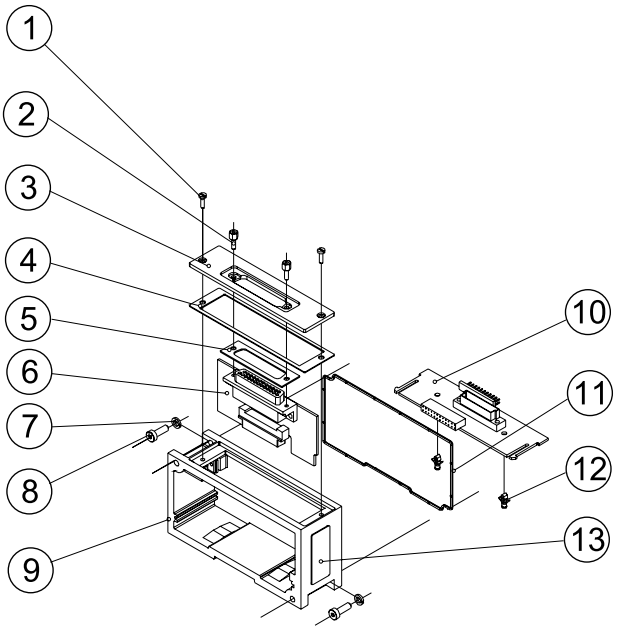

DET. NO.	NO. REQ'D	PART NAME	PART NO.
1	2	Screw	127-852
2	4	Hex Screw	127-825
3	1	Cover	105-427
4	1	Gasket	113-532
5	2	Gasket	113-507
6	1	Input Module Board Ass'y (Sinking NPN)	256-797
6	1	Input Module Board Ass'y (Sourcing PNP)	256-799
7	2	Lockwasher	128-188
8	2	Screw	127-697
9	1	Housing (not sold separately)	
10	1	I/O Backplane Board Ass'y	256-672
11	1	Gasket	113-531
12	2	Support Pin	140-828
13	2	Nameplate	122-1057

25 PIN SUB-D INPUT KITS	PART NO.
16 Point Sinking (NPN)	239-1869
16 Point Sourcing (PNP)	239-1871

Dual 15 Pin Sub-D Connector Digital Input Module (16 inputs)

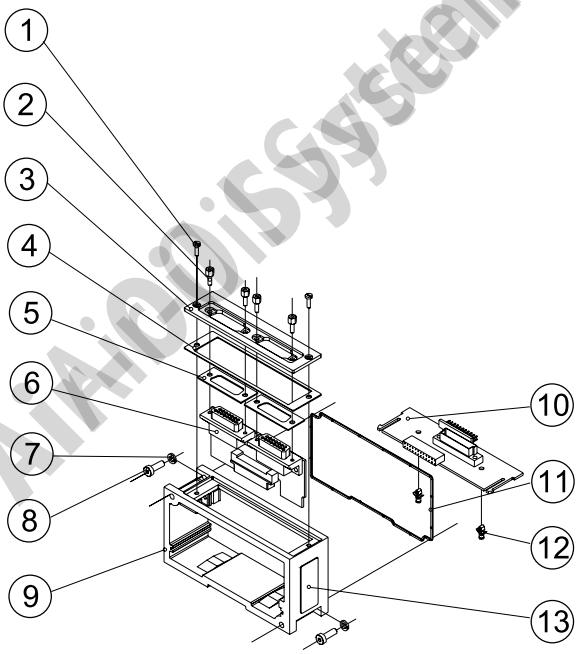

DET. NO.	NO. REQ'D	PART NAME	PART NO.
1	2	Screw	127-852
2	4	Hex Screw	127-825
3	1	Cover	105-426
4	1	Gasket	113-532
5	2	Gasket	113-566
6	1	Input Module Board Ass'y (Sinking NPN)	256-796
6	1	Input Module Board Ass'y (Sourcing PNP)	256-798
7	2	Lockwasher	128-188
8	2	Screw	127-697
9	1	Housing (not sold separately)	
10	1	I/O Backplane Board Ass'y	256-672
11	1	Gasket	113-531
12	2	Support Pin	140-828
13	2	Nameplate	122-1057

DUAL 15 PIN SUB-D INPUT KITS	PART NO.
16 Point Sinking (NPN)	239-1868
16 Point Sourcing (PNP)	239-1870

AirAid Systems, Inc. www.airaid.com

Information subject to change without notice. For ordering information or regarding your local sales office visit www.numatics.com.

19 Pin M23 Circular Connector Digital I/O Module (8 Inputs and 8 Outputs) 239-2196

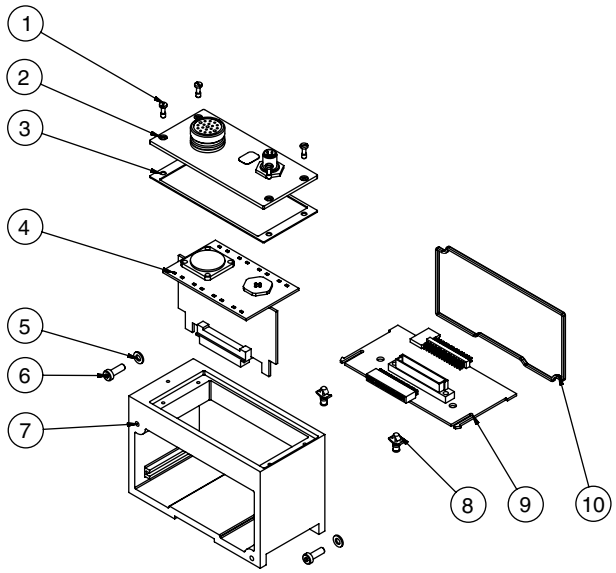

DET. NO.	NO. REQ'D	PART NAME	PART NO.
1	4	Screw	127-852
2	1	Cover	105-458
3	1	Gasket	113-533
4	1	18 Pin 8 I/O Board Assembly	256-880
5	2	Lockwasher	128-188
6	2	Screw	127-697
7	1	Housing	125-802
8	2	Support Pin	140-828
9	1	I/O Backplane Board Assembly	256-665
10	1	Gasket	113-531

19 Pin M23 Circular Connector Digital Input Module (16 Inputs) 239-2382

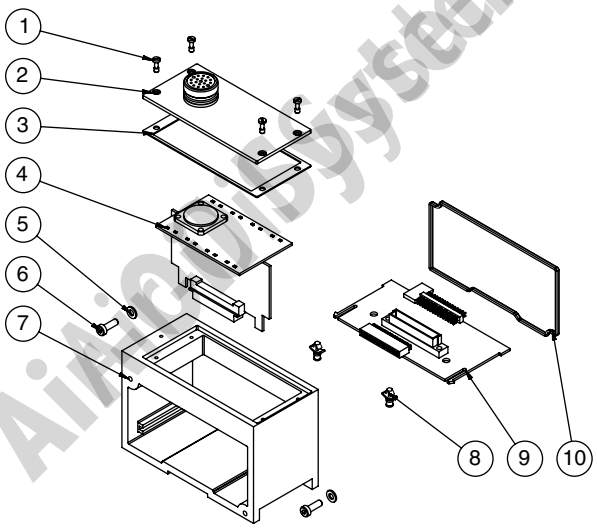

DET. NO.	NO. REQ'D	PART NAME	PART NO.
1	4	Screw	127-852
2	1	Cover	105-465
3	1	Gasket	113-533
4	1	19 Pin 16 Input Board Assembly	256-930
5	2	Lockwasher	128-188
6	2	Screw	127-697
7	1	Housing	125-802
8	2	Support Pin	140-828
9	1	I/O Backplane Board Assembly	256-665
10	1	Gasket	113-531

AirLoadSystems, Inc. www.airlib.com

25 Pin Sub-D Connector Digital Output Module w/Aux. Power Connector (22 Outputs) 239-1460

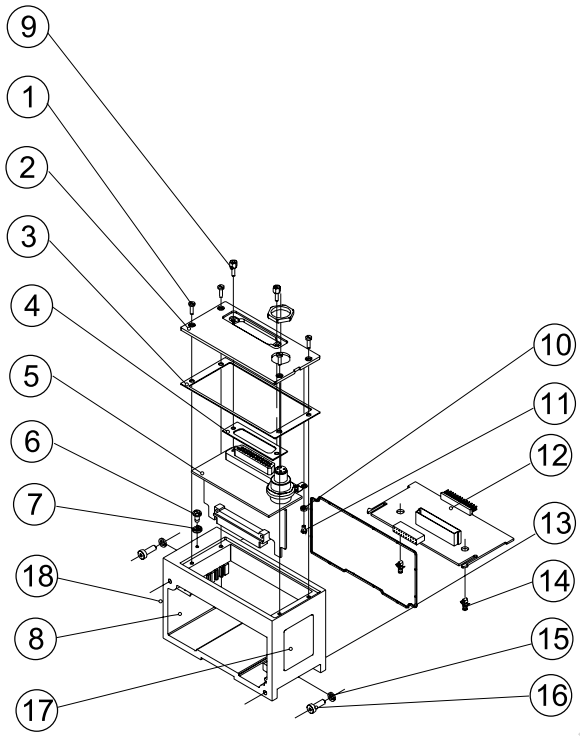

DET. NO.	NO. REQ'D	PART NAME	PART NO.
1	4	Screw	127-852
2	1	Cover	105-425
3	1	Gasket	113-533
4	1	Gasket	113-507
5	1	Output Board Ass'y	256-722
6	1	Screw	127-176
7	1	Washer	128-162
8	1	Housing	125-802
9	2	Jack Screw	127-825
10	1	Washer	128-350
11	1	Screw	127-172
12	1	I/O Backplane Board Ass'y	256-665
13	1	Gasket	113-531
14	2	Support Pin	140-828
15	2	Lockwasher	128-188
16	1	Screw	127-697
17	1	Nameplate	122-1058
18	1	Nameplate	122-1057
	1	Replacement Fuse (4A)	140-933

Dual 25 Pin Sub-D Connector Digital Output Module with Aux. Power Connector (32 Outputs) 239-1994

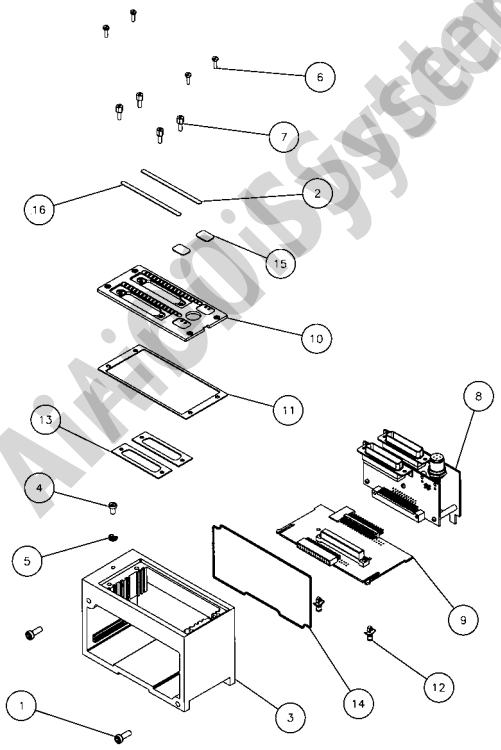

DET. NO.	NO. REQ'D	PART NAME	PART NO.
1	2	Screw	127-697
2	1	Cover Lens	122-1153
3	1	Housing	125-802
4	1	Ground Screw	127-176
5	1	Cup Washer	128-162
6	4	Screw	127-852
7	4	Jack Screw	127-825
8	1	Dual Sub-D Output Board	256-825
9	1	Backplane Board Assembly	256-665
10	1	Cover	105-448
11	1	Gasket	113-533
12	2	Support Pin	140-828
13	2	Gasket	113-507
14	1	Gasket	113-531
15	2	Lens	122-1180
16	1	Cover Lens	122-1156
	2	Replacement Fuse (4A)	140-933

AiAiDiSystems, Inc. www.aiaidi.com

Information subject to change without notice. For ordering information or regarding your local sales office visit www.numatics.com.

Valve Side Output Modules

Dual 25 Pin Sub-D Output Module 239-1867

- Used without valves only
- Located between communication module and right mounting cover
- Provides 32 output capability 16 outputs per connector.

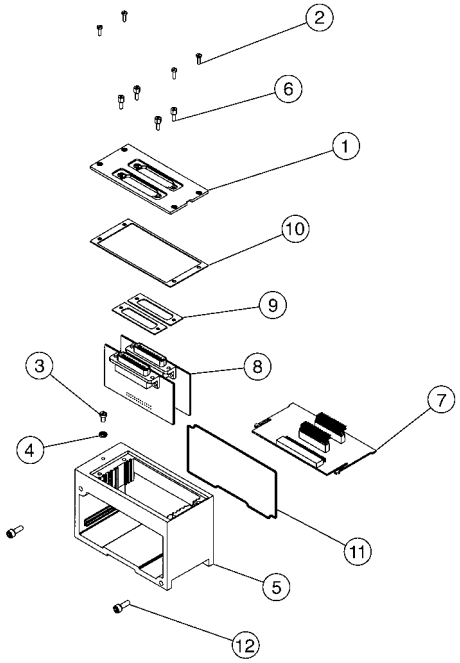

DET. NO.	NO. REQ'D	PART NAME	PART NO.
1	1	Cover, Dual Sub-D	105-445
2	4	Screw	127-852
3	1	Ground Screw	127-176
4	1	Cup Washer	128-162
5	1	Housing	125-802
6	4	Jack Screw	127-825
7	1	Backplane, Dual Sub-D	256-794
8	2	Connector Board	256-795
9	2	Gasket, 25 Pin Sub-D	113-507
10	1	Gasket, Cover	113-533
11	1	Gasket, Housing	113-531
12	2	Screw Assembly	127-396

Single 25 Pin Sub-D Output Module 239-1713

- Used to connect auxiliary valve manifold when main manifold utilizes 16 solenoids output or less.
- Picks up solenoid outputs 17-32.

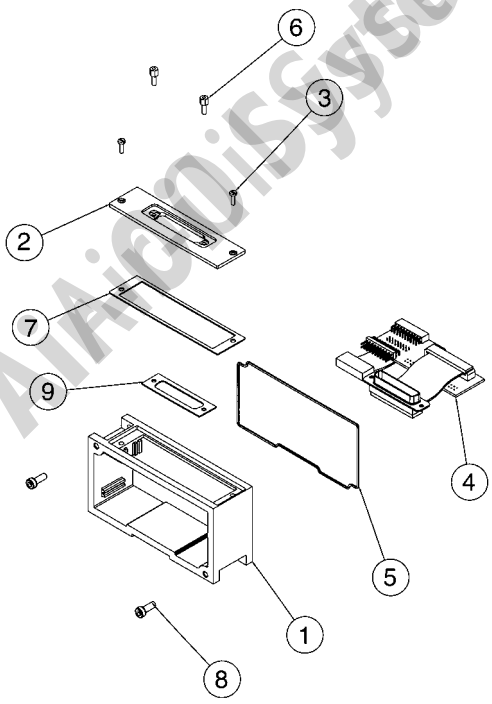

DET. NO.	NO. REQ'D	PART NAME	PART NO.
1	1	Housing	125-801
2	1	Cover	105-427
3	2	Screw	127-852
4	1	P.C. Board Assembly	256-741
5	1	Gasket	113-531
6	2	Jack Screw	127-825
7	1	Gasket	113-532
8	2	Screw	127-697
9	1	Gasket	113-507

AirAutomatic Systems, Inc. www.airbib.com

Valve Side Output Modules

19 Pin M23 Circular Output Module

239-2379

- Used to connect auxiliary valve manifold when main manifold utilizes 16 solenoids output or less.
- Picks up solenoid outputs 17-32.

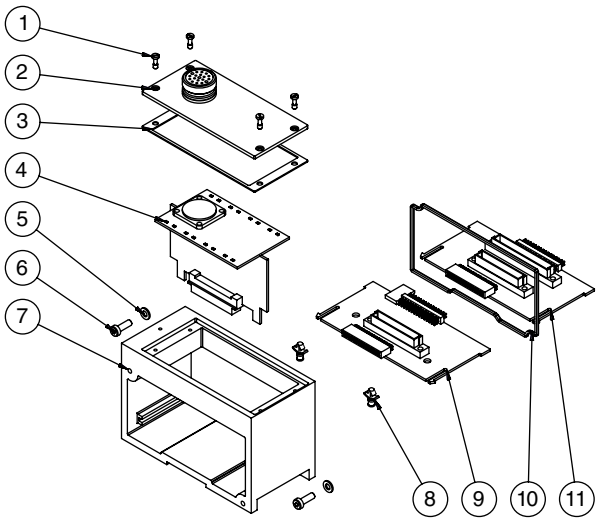

DET. NO.	NO. REQ'D	PART NAME	PART NO.
1	4	Screw	127-852A
2	1	Cover	105-465B
3	1	Gasket	113-533B
4	1	19 Pin 16 Output Board Assembly	256-929B
5	2	Lockwasher	128-188A
6	2	Screw	127-697A
7	1	Housing	125-802B
8	2	Support Pin	140-828A
9	1	Backplane Board Assembly	256-927B
10	1	Gasket	113-531B
11	1	Backplane Board Assembly	256-952B

Dual 15 Pin Sub-D Output Module

239-2041

- Use with cable on *page 42* to connect with standard 25 Pin Sub-D Manifold with 8 coils or less.
- 8 outputs per connector.

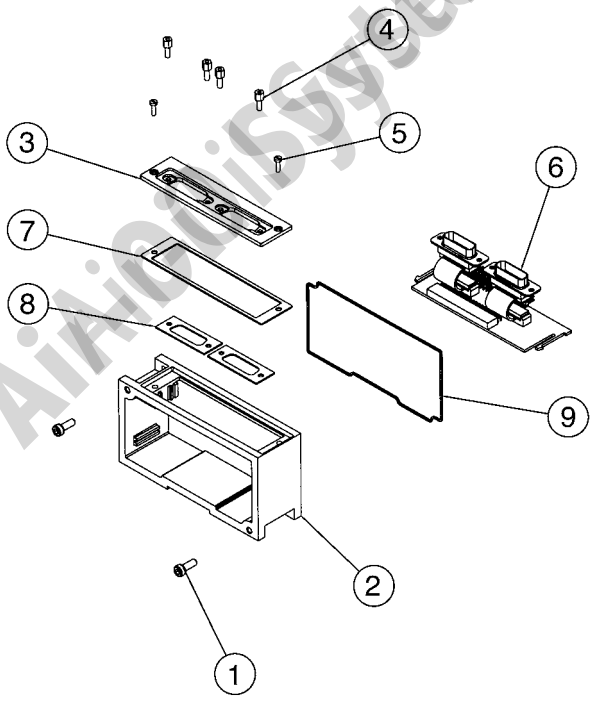

DET. NO.	NO. REQ'D	PART NAME	PART NO.
1	2	Screw	127-697
2	1	Housing	125-801
3	1	Cover	105-426
4	4	Jack Screw	127-825
5	2	Screw	127-852
6	1	Dual 15 Pin Sub-D Board Assembly	256-847
7	1	Gasket	113-532
8	2	Gasket	113-566
9	1	Gasket	113-531

AirPro Systems, Inc. www.airpro.com

Information subject to change without notice. For ordering information or regarding your local sales office visit www.numatics.com.

Left Mounting Cover Assembly

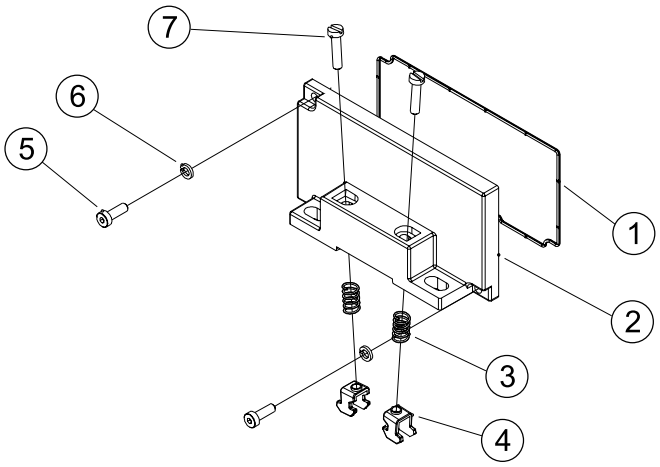

LEFT HAND MOUNTING COVER ASSEMBLY	PART NO.
Without DIN	239-1816
With DIN	239-1815

DET. NO.	NO. REQ'D	PART NAME	PART NO.
1	1	Gasket	113-531
2	1	Mounting Cover	105-403
3	2	Spring (DIN Rail Only)	115-355
4	2	Clamp (DIN Rail Only)	125-720
5	2	Screw	127-697
6	2	Lockwasher	128-188
7	2	Screw (DIN Rail Only)	127-472

Right Mounting Cover Assembly

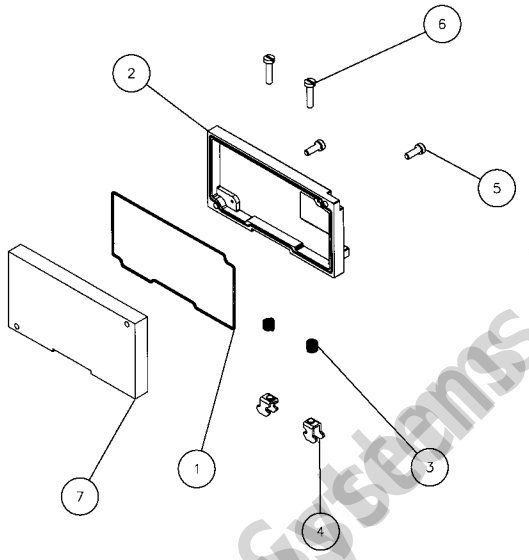

RIGHT HAND MOUNTING COVER ASSEMBLY	PART NO.
Without DIN	239-1873
With DIN	239-1872

DET. NO.	NO. REQ'D	PART NAME	PART NO.
1	1	Gasket	113-531
2	1	Mounting Cover	105-403
3	2	Spring (DIN Rail Only)	115-355
4	2	Clamp (DIN Rail Only)	125-720
5	2	Screw	127-697
6	2	Screw (DIN Rail Only)	127-472
7	1	Adaptor Plate	119-734

Adapter Kit 239-2094
2002 Series to G2-2 Electronics

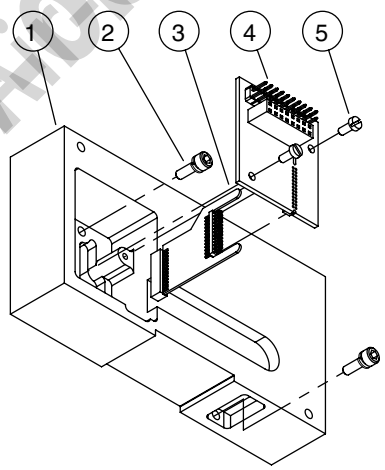

DET. NO.	NO. REQ'D	PART NAME	PART NO.
1	1	Adapter Plate	119-743
2	2	Screw	127-794
3	1	PC Board Assembly	256-852
4	1	PC Board Assembly	256-853
5	2	Screw w/ Lockwasher	127-564

AirACDiSystems, Inc www.airacdi.com

Dimensional Drawing G2-2 Fieldbus Communication Assembly

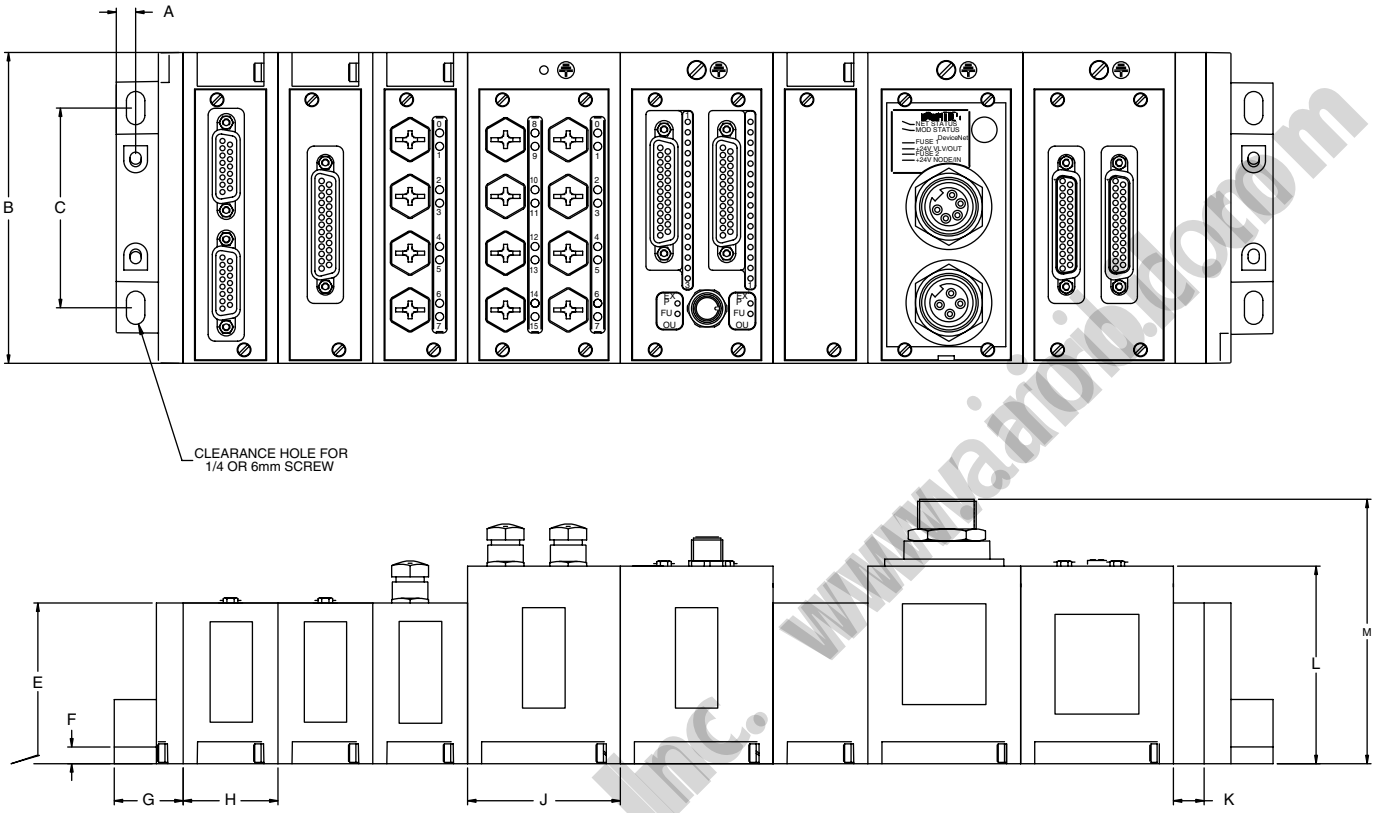

Dimensions

top dimensions = inches
bottom dimensions (in parenthesis) = millimeters

A	B	C	E	F	G	H	J	K	L	M
0.29 (7.4)	4.65 (118.1)	2.98 (75.7)	2.40 (61.0)	1.00 (25.4)	1.00 (25.4)	1.42 (36.1)	2.28 (57.9)	0.46 (11.7)	2.95 (74.9)	3.95 (100.3)

AirAidDiSystems, Inc. www.airaid.com

Information subject to change without notice. For ordering information or regarding your local sales office visit www.numatics.com.

Individual Base Node (IBN)

Why use Numatics Fieldbus communication electronics? ***Modular Reality***

- Up to 2 discrete output points and 2 valve solenoids and input points per valve assembly
- Enhanced diagnostics include discrete I/O status with short circuit protection
- Software or manual configuration simplifies commissioning
- Plug-together flexibility
- Conformance tested ensures compatibility
- Shorted and open load diagnostics
- NEMA 4/IP65 protected against water splash

Supported Protocols:

- DeviceLogix
- DeviceNet

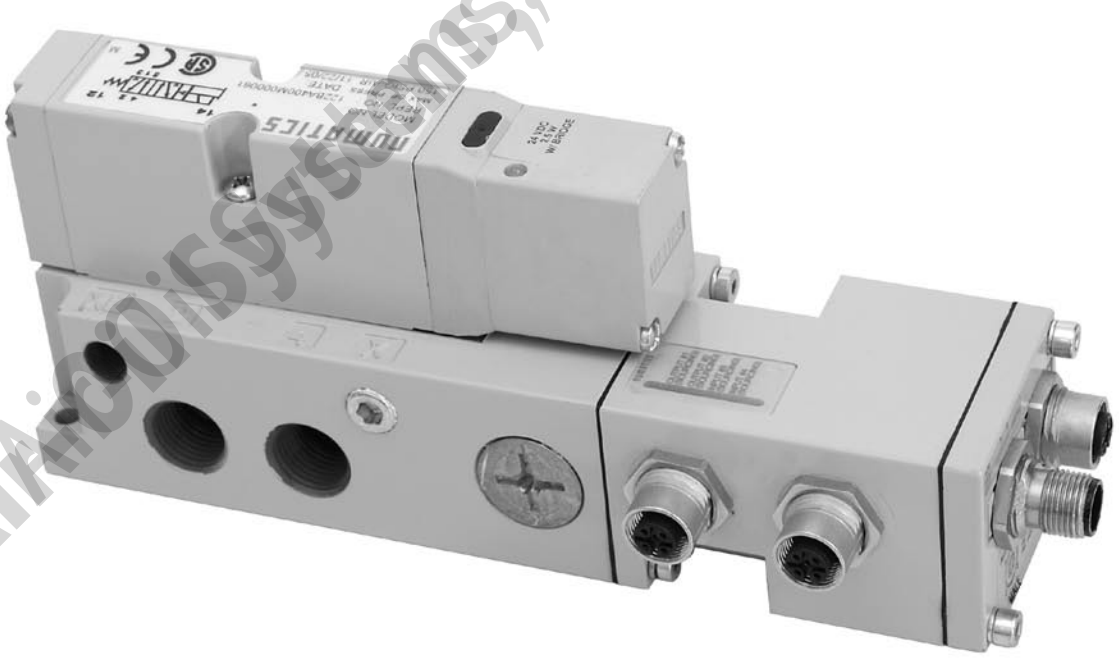

AirAutoSystems, Inc. www.airab.com

DeviceLogix

DeviceLogix is a Rockwell Automation technology that allows a DeviceNet node to be programmed to execute a sequence independently from the control for the main PLC/IPC. A DeviceLogix enabled DeviceNet node can be used in conjunction with a standard DeviceNet network, providing simple distributed control functionality. Additionally, it can also be used in a standalone application, without a network connection or PLC/IPC, to sequence pneumatic valves and control I/O. Numatics has integrated this licensed technology into its DeviceNet compatible valve manifold series, which combine the functionality of a modular pneumatic valve system with integrated I/O.

Programming of the DeviceLogix enabled node is done using the industry standard DeviceNet commissioning software tool RSNetworx for DeviceNet for Rockwell Automation. The programming software features an easily understandable graphics environment where the users can simply “drag and drop” logic function blocks (i.e. AND, NAND, OR, NOR, XOR, XNOR, RS LATCHES, COUNTERS and TIMERS) onto a page and interconnect them to develop the required sequence, or ladder logic programming can be used to develop a sequence. The programmed sequence is downloaded to the node via the standard DeviceNet communication connection, thus multiple nodes can be programmed simultaneously on the same network.

Technical Data

ELECTRICAL DATA	VOLTAGE	CURRENT
Node Power	24 VDC +/- 10%	0.040 amps.
Bus Power	11-25 VDC	0.025 amps.
Valve & Discrete I/O	24 VDC +/- 10%	8 amps. maximum
Aux Power Connector	Single key 4 pin 12mm micro type (male)	
Communication Connector	Single key 5 pin 12mm micro type (male)	
LED’s	Module Status, Network status, Auxiliary power status, Logic enabled and I/O status	
OPERATING DATA		
Temperature Range	-10° to +115° F (-23° to +46° C)	
Humidity	95% relative humidity, non condensing	
Moisture	Designed to meet NEMA 4 / IP65 requirements	
CONFIGURATION DATA		
Communication Module	Contains all communication electronics as well as short circuit protected driver circuitry for up to 2 valve solenoids	
Maximum Valve Solenoid Outputs	2	
Maximum Discrete I/O Points	Various Combinations of 2 outputs and 6 inputs	
NETWORK DATA		
Supported Baud Rates	125K, 250K, 500K and Autobaud	
Supported Connection Types	Polled, Cyclic, Change of State (COS) and Combination Message Capability	
Bus Connector	Single key 5 pin 12mm micro type (male)	
Diagnostics	Shorts and open load conditions from valve solenoid coils & outputs are monitored	
Special Features	Supports Auto-Device Replacement (ADR)	

Electronic Data Sheet (EDS) file and technical manuals are available in the download section of the Numatics, Inc. web site at: www.numatics.com/fieldbus

AirFOil Systems, Inc. www.airfoil.com

DeviceNet

DeviceNet is an open protocol bus communication system by Allen-Bradley based on Controller Area Network (CAN) technology. The governing body for DeviceNet is the Open DeviceNet Vendors Association (ODVA). The ODVA controls the DeviceNet specification and oversees product conformance testing.

More information about DeviceNet and the ODVA can be obtained from www.odva.org

www.aiaiodisysteems.com
AiAiodiSysteems, Inc.

Technical Data

ELECTRICAL DATA	VOLTAGE	CURRENT
Node Power	24 VDC +/- 10%	0.040 amps.
Bus Power	11-25 VDC	0.025 amps.
Valve & Discrete I/O	24 VDC +/- 10%	8 amps. maximum
Aux Power Connector	Single key 4 pin 12mm micro type (male)	
Communication Connector	Single key 5 pin 12mm micro type (male)	
LED's	Module Status, network status, auxiliary power status and I/O status	
OPERATING DATA		
Temperature Range	-10° to +115° F (-23° to +46° C)	
Humidity	95% relative humidity, non condensing	
Moisture	Designed to meet NEMA 4 / IP65 requirements	
CONFIGURATION DATA		
Communication Module	Contains all communication electronics as well as short circuit protected driver circuitry for up to 22 valve solenoids	
Maximum Valve Solenoid Outputs	2	
Maximum Discrete I/O Points	Various Combinations of 2 outputs and 6 inputs	
NETWORK DATA		
Supported Baud Rates	125K, 250K, 500K and Autobaud	
Supported Connection Types	Polled, Cyclic, Change of State (COS) and Combination Message Capability	
Bus Connector	Single key 5 pin 12mm micro type (male)	
Diagnostics	Shorts and open load conditions from valve solenoid coils & outputs are monitored	
Special Features	Supports Auto-Device Replacement (ADR)	

Electronic Data Sheet (EDS) file and technical manuals are available in the download section of the Numatics, Inc. web site at: www.numatics.com/fieldbus

How to Order

Valves

122 BB 4 E1 M N 000 61

Valve Series & Port Size
122 = 1/4
123 = 3/8

Valve Type
BA = Single Solenoid Pilot, (Spring Return) w/Flush Non-Locking Override
BB = Double Solenoid Pilot w/Flush Non-Locking Override

Function
4 = 2 Position, 4-way
5 = 3 Position, 4-way Open Center
6 = 3 Position, 4-way Closed Center

Mounting
E1 = Side Ports, Individual Exhaust, DeviceNet, 2 In (1 Micro Conn.) / 2 Out (Valve), Comm. Conn.
E2 = Side Ports, Individual Exhaust, DeviceNet, 4 In (2 Micro Conn.) / 2 Out (Valve), Comm. & Aux; Power Conn.
E3 = Side Ports, Individual Exhaust, DeviceNet, 4 In (2 Micro Conn.) / 4 Out (Valve & Micro Conn.), Comm.
E4 = Side Ports, Individual Exhaust, DeviceNet, 6 In (3 Micro Conn.) / 4 Out (Valve & 1 Micro Conn.), Comm. Aux Power Conn.
E6 = E1 with Sandwich Speed Control
E7 = E2 with Sandwich Speed Control
E8 = E3 with Sandwich Speed Control
E9 = E4 with Sandwich Speed Control
F1 = Side Ports, Individual Exhaust, DeviceLogix, 2 In (1 Micro Conn.) / 2 Out (Valve), Comm. Conn.
F2 = Side Ports, Individual Exhaust, DeviceLogix, 4 In (2 Micro Conn.) / 2 Out (Valve), Comm. & Aux; Power Conn.
F3 = Side Ports, Individual Exhaust, DeviceLogix, 4 In (2 Micro Conn.) / 4 Out (Valve & Micro Conn.), Comm.
F4 = Side Ports, Individual Exhaust, DeviceLogix, 6 In (3 Micro Conn.) / 4 Out (Valve & 1 Micro Conn.), Comm. Aux Power Conn.
F6 = F1 with Sandwich Speed Control
F7 = F2 with Sandwich Speed Control
F8 = F3 with Sandwich Speed Control
F9 = F4 with Sandwich Speed Control

Wiring Option
M = Plug-in DC w/Light

Port Type
N = NPTF
G = G Tap

Special Options
11B = Flush Locking Override
11M = No Override

Voltage
61 = 24 VDC

AirAutoSystems, Inc. www.airautosystems.com

Information subject to change without notice. For ordering information or regarding your local sales office visit www.numatics.com.

Valve on Individual Base Node

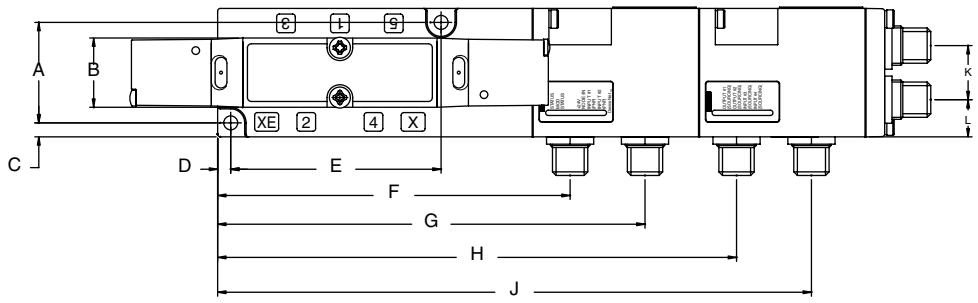

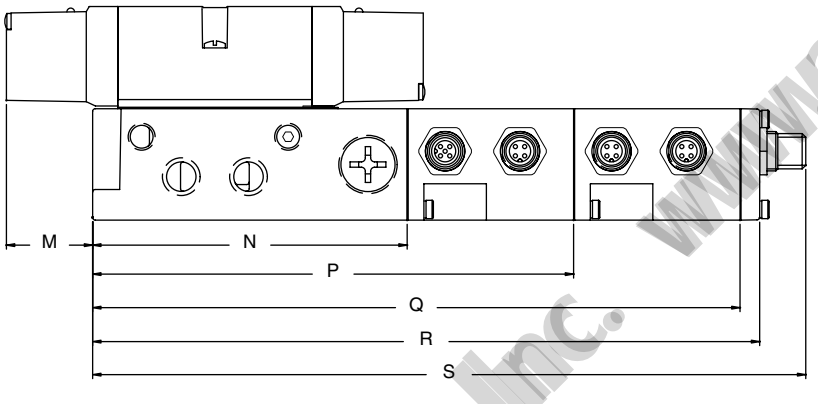

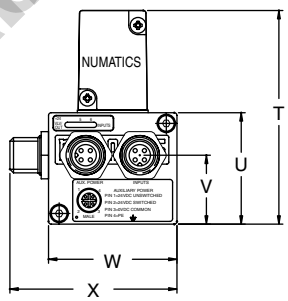

AirCOMSystems, Inc. www.aircom.com

Dimensions

top dimensions = inches
bottom dimensions (in parenthesis) = millimeters

A	B	C	D	E	F	G	H	J	K	L	M	N	P	Q	R
1.51 (38.3)	1.04 (26.4)	0.21 (5.3)	0.20 (5.0)	3.16 (80.3)	5.29 (134.5)	6.42 (163.0)	7.79 (198.0)	8.92 (226.5)	0.81 (20.6)	0.56 (14.2)	1.30 (32.9)	4.72 (120.0)	7.22 (183.5)	9.72 (247.0)	10.02 (254.5)

S	T	U	V	W	X
10.71 (272.1)	3.21 (81.5)	1.67 (42.5)	1.04 (26.3)	1.93 (49.0)	2.51 (63.7)

2 Solenoid Outputs/2 Inputs

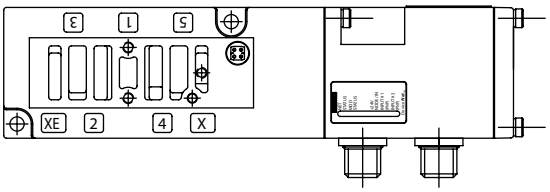

Base Assemblies

Port Size	DeviceLogix (F1)	DeviceNet (E1)
1/4 NPTF	203-1246	203-1230
3/8 NPTF	203-1247	203-1231
1/4 G	203-1248	203-1232
3/8G	203-1249	203-1233

2 Solenoid Outputs/4 Inputs and Auxiliary Power Connector

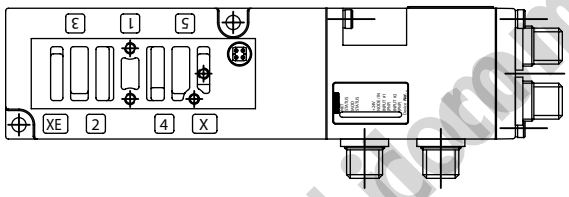

Base Assemblies

Port Size	DeviceLogix (F2)	DeviceNet (E2)
1/4 NPTF	203-1250	203-1234
3/8 NPTF	203-1251	203-1235
1/4 G	203-1252	203-1236
3/8G	203-1253	203-1237

2 Solenoid Outputs/4 Inputs and 2 Outputs

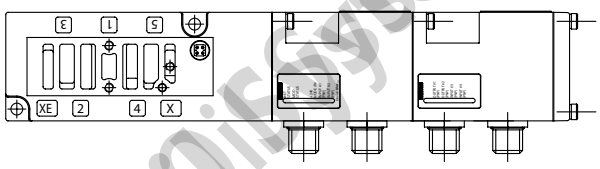

Base Assemblies

Port Size	DeviceLogix (F3)	DeviceNet (E3)
1/4 NPTF	203-1254	203-1238
3/8 NPTF	203-1255	203-1239
1/4 G	203-1256	203-1240
3/8G	203-1257	203-1241

2 Solenoid Outputs/6 Inputs/2 Outputs and Auxiliary Power Connector

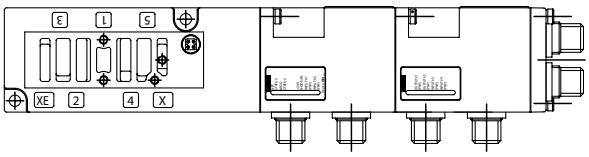

Base Assemblies

Port Size	DeviceLogix (F4)	DeviceNet (E4)
1/4 NPTF	203-1258	203-1242
3/8 NPTF	203-1259	203-1243
1/4 G	203-1260	203-1244
3/8G	203-1261	203-1245

AirCraft Systems, Inc. www.aircraft.com

Information subject to change without notice. For ordering information or regarding your local sales office visit www.numatics.com.

Auxiliary Power Replacement Kit 239-2441

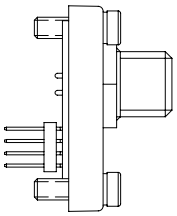

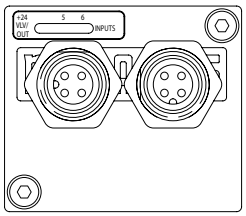

Auxiliary I/O Replacement Kit 239-2440

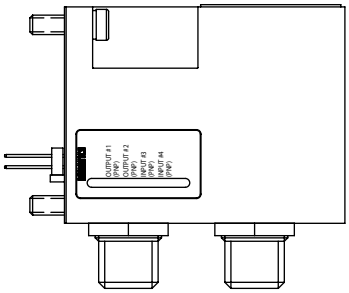

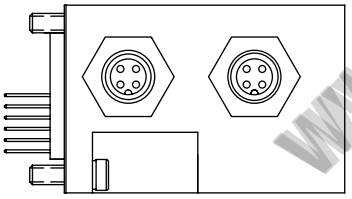

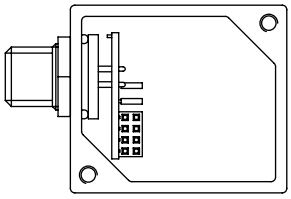

DeviceLogix Node Replacement Kit 239-2438

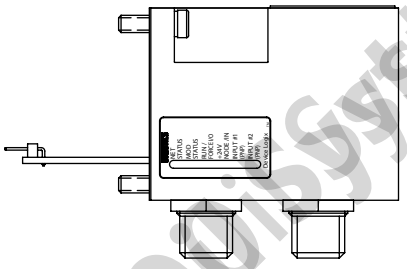

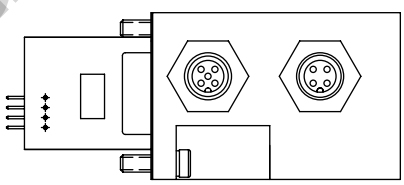

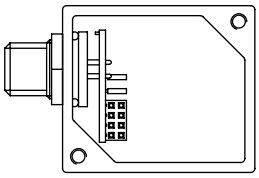

DeviceNet Node Replacement Kit 239-2439

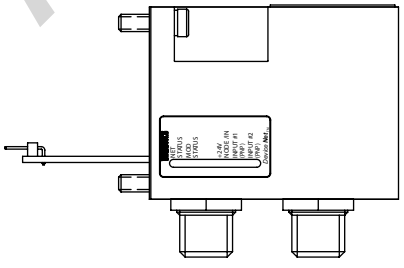

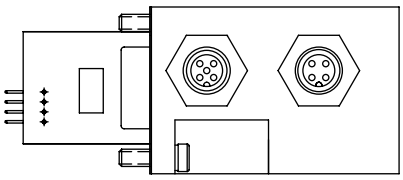

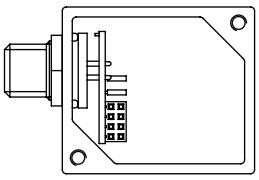

AirComSystems, Inc. www.aircom.com

G2-2 Fieldbus Communications Electronics

Direct to PLC manifolds with integrated I/O modules

- No internal wiring simplifies assembly
- Up to 15 discrete I/O points and 16 valve solenoids per manifold
- Plug-together flexibility
- Backplane technology allows fast maintenance
- NEMA 4/IP65 protected against water splash
- DIN rail mountable
- Single multi-conductor cable connection for entire manifold controls valves and I/O

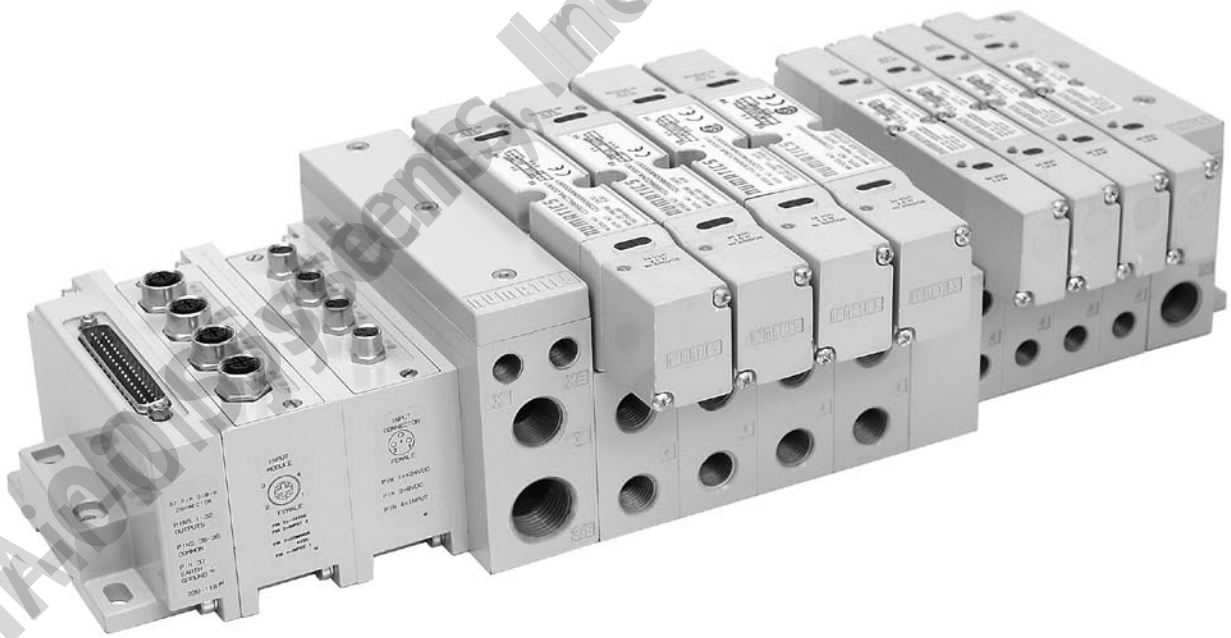

AirAutomation Systems, Inc. www.airautoinc.com

Information subject to change without notice. For ordering information or regarding your local sales office visit www.numatics.com.

I/O Modules

Technical Data

ELECTRICAL DATA	
Inputs:	
Voltage	24 VDC
Type	PNP or contact closure
LED Indicator	Input status
Outputs:	
Voltage	24 VDC +/- 10%
Current	0.5 amperes per output
Type	Sourcing (PNP)
LED Indicator	Output status
OPERATING DATA	
Temperature Range	-10˚ to +115˚ F (-23˚ to +46˚ C)
Humidity	95% relative humidity, non-condensing
Moisture	Designed to meet NEMA 4 / IP65 requirements
Connectors	Single key 4 pin female 12mm micro, 8 mm PICO and 25 pin Sub-D connectors
CONFIGURATION DATA	

	12 mm	8 mm	25 Pin Sub-d
Connectors per Block	4	4	1
I/O Points per Connector	2	1	15
Total I/O points	8	4	15

Note: A direct to PLC I/O manifold assembly must utilize the singular I/O module when there is only (1) I/O module in the assembly. For all assemblies utilizing two or more modules a “left” and a “right hand” module must be used. The “middle” I/O module, if needed, must be used in conjuction with the left and right hand I/O module.

AiAiO-DiSystems, Inc. www.aiaiorb.com

How to Order

1) Assembly Kit Selection

A K D E D 0 0 0 0 3 L STD

Electrical / Electronic Type & Location
W = 25 Pin Sub-D
Y = 37 Pin Sub-D
D = 26 Pin Round Connector

Valve Series
B = 2035 Series
E = 2005 or ISO 15407-2 18 mm
G = 2012 or ISO 15407-2 26 mm
Q = ISO 5599/2 Size 1
R = ISO 5599/2 Size 2
S = ISO 5599/2 Size 3

Number of Valve Stations*

A	= 1	I	= 9
B	= 2	J	= 10
C	= 3	K	= 11
D	= 4	L	= 12
E	= 5	M	= 13
F	= 6	N	= 14
G	= 7	O	= 15
H	= 8	P	= 16

*Maximum number of valve stations is determined by the combination of single and double Z-Boards types installed in the manifold sub-bases.

Options
STD = Standard
DRM = DIN Rail Mounting
MUF = Muffler in End Plates
DWM = DIN Rail with MUF
14X = External Pilot

Port Type
L = Push In (2005 or 2012 only)
N = NPTF
G = Metric

End Plate Port Size
2** = 2012
3** = 2012, 2005, & ISO 5599/2 Size 1
4 = ISO 5599/2 Size 2 & 2035
6 = ISO 5599/2 Size 3
H** = 2012
K** = 2005 or 2012
** See chart below

2005	2012	
3 = 3/8	3 = Port Type G, N, or L	
K = 10mm tube	Port 1 = 3/8	Port 3/5 = 1/2
	2 = Port Type L Only	
	Port 1 = 1/4	Port 3/5 = 3/8
	H = Port Type L Only	
	Port 1 = 8mm	Port 3/5 = 12mm
	K = Port Type L Only	
	Port 1 = 10mm	Port 3/5 = 14mm

AirAutoSystems, Inc. www.airautos.com

Information subject to change without notice. For ordering information or regarding your local sales office visit www.numatics.com.

When Ordering:

"AKW" Manifold Assembly Kit with Direct to PLC I/O Modules 2005, 2012 & 2035 Series and ISO Series

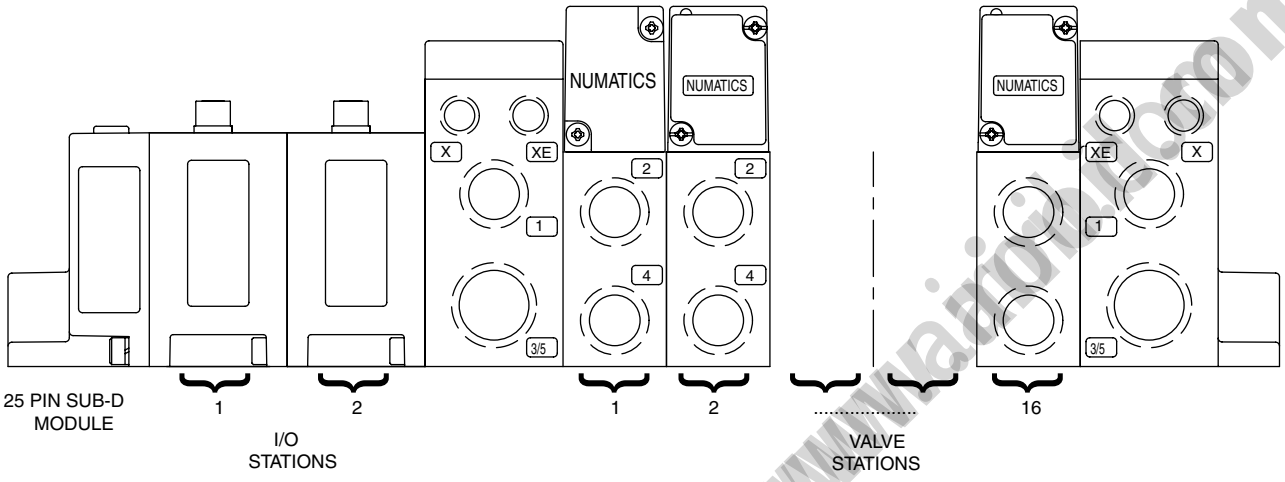

- Each Direct to PLC I/O module station is listed in sequential order from left to right between the "AK" number and the 1st valve station.
- Each valve manifold station is listed in sequential order from left to right when facing the port side of the manifold as indicated
- Total of 16 solenoid outputs are available. Either 16 single solenoid valves or 8 double solenoid valves or any combination of singles and doubles, not to exceed 16 solenoid outputs
- When selecting Direct to PLC I/O modules a "singular" module must be used when there is only one module in the assembly. A "left hand" and "right hand" module must be used when there are two modules in the assembly.
- When utilizing the 25 pin sub-d electrical connection a maximum of 5 discrete I/O points are available.
- Each 12mm I/O block utilizes 8 discrete I/O and each 8mm I/O block utilizes 4 discrete I/O

Example order:

	AKWGH00003LSTD
I/O station 1	239-2504 (Left Hand)
I/O station 2	239-2505 (Right Hand)
Valve station 1	123BA4Z2ML00061
Valve station 2	123BA4Z2ML00061
Valve station 3	123BA4Z2ML00061
Valve station 4	123BA4Z2ML00061
Valve station 5	123BA4Z2ML00061
Valve station 6	123BA4Z2ML00061
Valve station 7	123BA4Z2ML00061
Valve station 8	123BA4Z2ML00061
	ASSEMBLED

MANIFOLD ELECTRICAL CONNECTION	NO. OF DISCRETE I/O	CONNECTOR TYPE	NO. OF MODULES	MODULES REQUIRED			
				SINGULAR	LEFT HAND	MIDDLE	RIGHT HAND
25 pin sub-d (AKW)	4	8mm	1 module	239-2503	N/A	N/A	N/A
	5	12mm	1 module	239-2507	N/A	N/A	N/A
	5	Sub-D	1 module	239-2096	N/A	N/A	N/A
	5	8mm	2 modules	N/A	239-2504	N/A	239-2505

AAIDO Systems, Inc. www.aaidoinc.com

When Ordering:

"AKY" Manifold Assembly Kit with Direct to PLC I/O Modules 2005, 2012 & 2035 Series and ISO Series

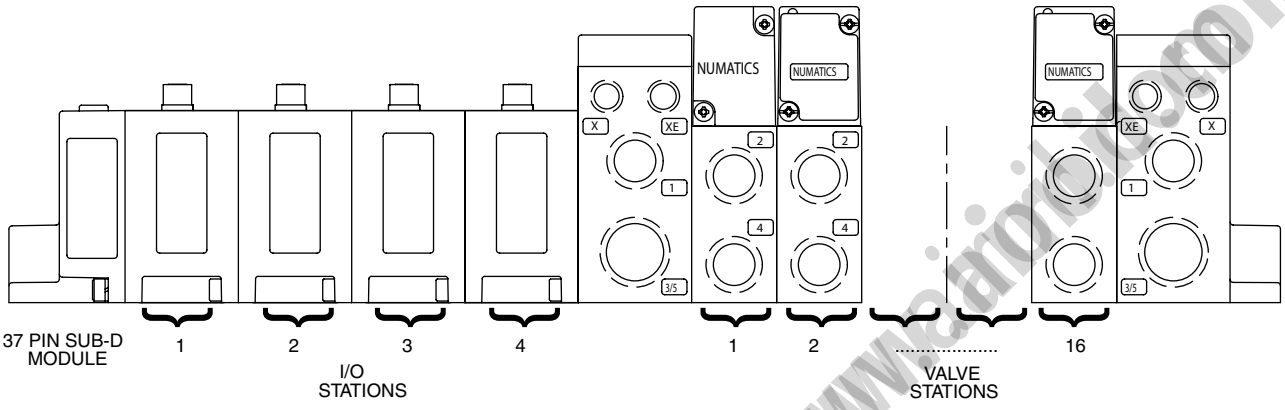

- Each Direct to PLC I/O module station is listed in sequential order from left to right between the "AK" number and the 1st valve station.
- Each valve manifold station is listed in sequential order from left to right when facing the port side of the manifold as indicated
- Total of 16 solenoid outputs are available. Either 16 single solenoid valves or 8 double solenoid valves or any combination of singles and doubles, not to exceed 16 solenoid outputs
- When selecting Direct to PLC I/O modules a "singular" module must be used when there is only one module in the assembly. A "left hand" and "right hand" module must be used when there are two modules in the assembly.
- When utilizing the 37 pin sub-d electrical connection a maximum of 15 discrete I/O points are available.
- Each 12mm I/O block utilizes 8 discrete I/O and each 8mm I/O block utilizes 4 discrete I/O.

Example order:

	AKYGH00003LSTD
I/O station 1	239-2504 (Left Hand)
I/O station 2	239-2506 (Middle)
I/O station 3	239-2506 (Middle)
I/O station 4	239-2505 (Right Hand)
Valve station 1	123BA4Z2ML00061
Valve station 2	123BA4Z2ML00061
Valve station 3	123BA4Z2ML00061
Valve station 4	123BA4Z2ML00061
Valve station 5	123BA4Z2ML00061
Valve station 6	123BA4Z2ML00061
Valve station 7	123BA4Z2ML00061
Valve station 8	123BA4Z2ML00061
	ASSEMBLED

MANIFOLD ELECTRICAL CONNECTION	NO. OF DISCRETE I/O	CONNECTOR TYPE	NO. OF MODULES	MODULES REQUIRED			
				SINGULAR	LEFT HAND	MIDDLE	RIGHT HAND
	4	8mm	1 module	239-2503	N/A	N/A	N/A
	8	12mm	1 module	239-2507	N/A	N/A	N/A
	15	Sub-D	1 module	239-2096	N/A	N/A	N/A
37 pin sub-d (AKY)	8	8mm	2 modules	N/A	239-2504	N/A	239-2505
	15	12mm	2 modules	N/A	239-2508	N/A	239-2509
	12	8mm	3 modules	N/A	239-2504	239-2506	239-2505
	15	8mm	4 modules	N/A	239-2504	(2) 239-2506	239-2505

www.airoidsystems, Inc.

Information subject to change without notice. For ordering information or regarding your local sales office visit www.numatics.com.

When Ordering:

"AKD" Manifold Assembly Kit with Direct to PLC I/O Modules 2005, 2012 & 2035 Series and ISO Series

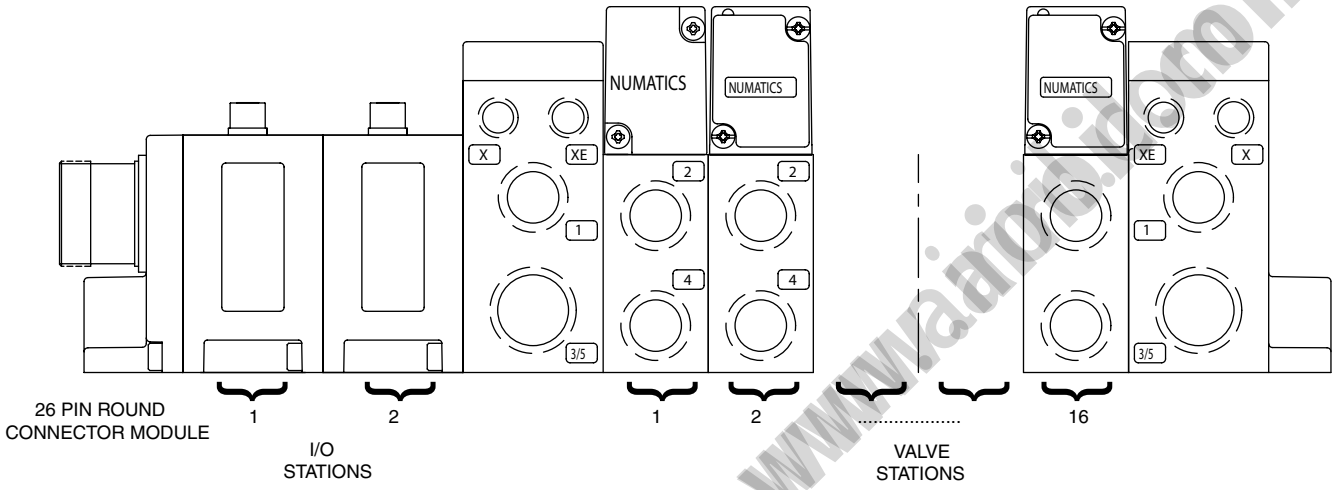

- Each Direct to PLC I/O module station is listed in sequential order from left to right between the "AK" number and the 1st valve station.
- Each valve manifold station is listed in sequential order from left to right when facing the port side of the manifold as indicated
- Total of 16 solenoid outputs are available. Either 16 single solenoid valves or 8 double solenoid valves or any combination of singles and doubles, not to exceed 16 solenoid outputs
- When selecting Direct to PLC I/O modules a "singular" module must be used when there is only one module in the assembly. A "left hand" and "right hand" module must be used when there are two modules in the assembly.
- When utilizing the 26 pin round electrical connection a maximum of 5 discrete I/O points are available.
- Each 12mm I/O block utilizes 8 discrete I/O and each 8mm I/O block utilizes 4 discrete I/O.

Example order:

	AKDGH00003LSTD
I/O station 1	239-2504 (Left Hand)
I/O station 2	239-2505 (Right Hand)
Valve station 1	123BA4Z2ML00061
Valve station 2	123BA4Z2ML00061
Valve station 3	123BA4Z2ML00061
Valve station 4	123BA4Z2ML00061
Valve station 5	123BA4Z2ML00061
Valve station 6	123BA4Z2ML00061
Valve station 7	123BA4Z2ML00061
Valve station 8	123BA4Z2ML00061
	ASSEMBLED

MANIFOLD ELECTRICAL CONNECTION	NO. OF DISCRETE I/O	CONNECTOR TYPE	NO. OF MODULES	MODULES REQUIRED			
				SINGULAR	LEFT HAND	MIDDLE	RIGHT HAND
26 pin round (AKD)	4	8mm	1 module	239-2503	N/A	N/A	N/A
	5	12mm	1 module	239-2507	N/A	N/A	N/A
	5	Sub-D	1 module	239-2096	N/A	N/A	N/A
	5	8mm	2 modules	N/A	239-2504	N/A	239-2505

AiAiDiSystems, Inc. www.aiaidi.com

12mm I/O Module Assemblies

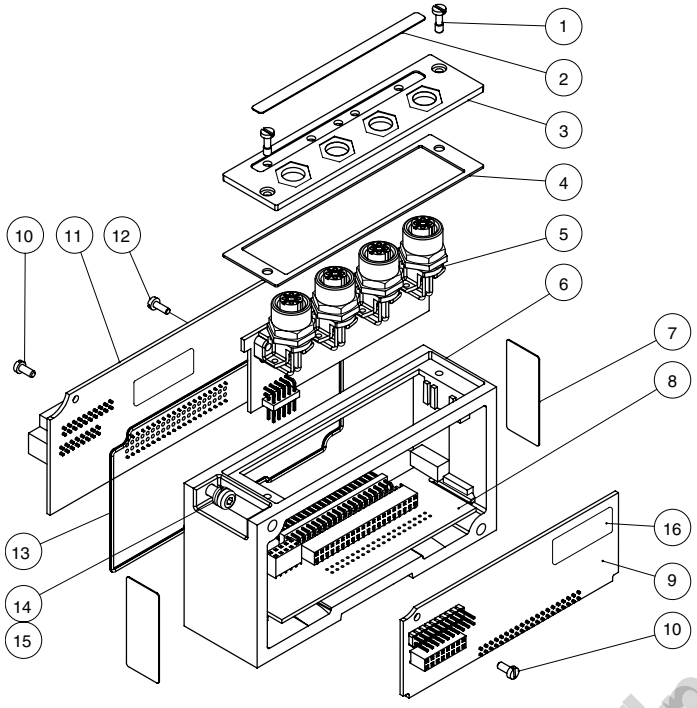

DET. NO.	NO. REQ'D	PART NAME	PART NO.
1	2	Screw	127-852
2	1	Lens	122-1076
3	1	Cover	105-468
4	1	Gasket	113-532
5	1	M8 I/O Board	256-944
6	1	Housing	125-1135
7	2	Label	122-1057
8	1	Transition Backplane Board	256-943
9	1	Converter Board	256-671
10	2	Screw	127-794
11	1	Transition Board	256-939
12	1	Ground Screw	127-318
13	1	Gasket	113-531
14	2	Screw	127-697
15	2	Lockwasher	128-188
16	4	Label	122-770

	SINGULAR	LEFT HAND	RIGHT HAND
Module	239-2507	239-3508	239-2509
Replacement Board	240-108	240-108	240-108

8 mm I/O Module Assemblies

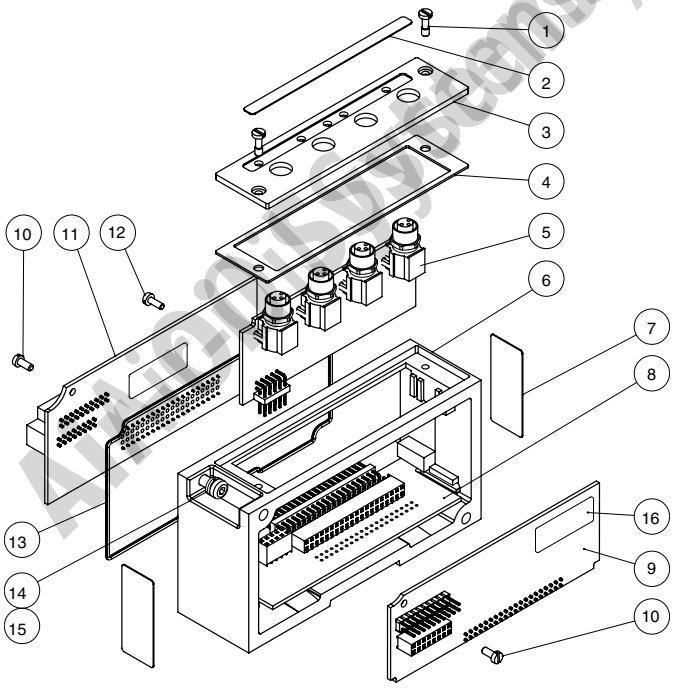

DET. NO.	NO. REQ'D	PART NAME	PART NO.
1	2	Screw	127-852
2	1	Lens	122-1216
3	1	Cover	105-467
4	1	Gasket	113-532
5	1	M8 I/O Board	256-940
6	1	Housing	125-1135
7	2	Label	122-1057
8	1	Transition Backplane Board	256-941
9	1	Converter Board	256-671
10	2	Screw	127-794
11	1	Transition Board	256-939
12	1	Ground Screw	127-318
13	1	Gasket	113-531
14	2	Screw	127-697
15	2	Lockwasher	128-188
16	4	Label	122-770

	SINGULAR	LEFT HAND	RIGHT HAND	MIDDLE
Module	239-2503	239-2504	239-2505	239-2506
Replacement Board	256-940	256-940	256-940	256-940

www.aaroib.com
AA-Aaron Systems, Inc.

Information subject to change without notice. For ordering information or regarding your local sales office visit www.numatics.com.

25 Pin Sub-D I/O Module Assembly

Input/Output Module Kit 239-2096

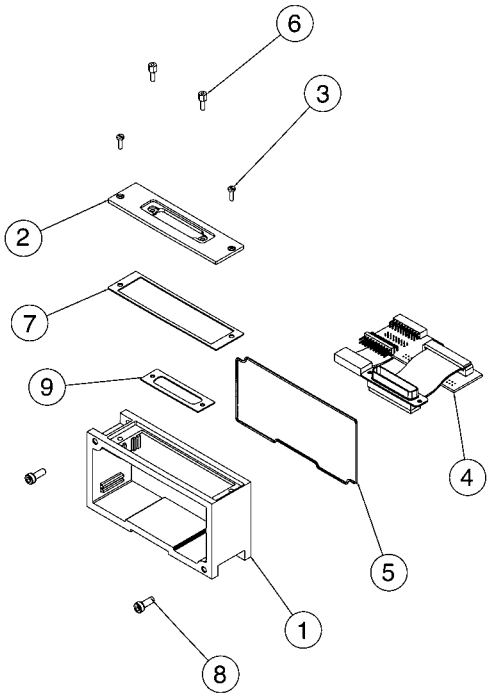

DET. NO.	NO. REQ'D	PART NAME	PART NO.
1	1	Housing	125-801
2	1	Cover	105-427
3	2	Screw	127-852
4	1	P.C. Board Assembly	256-741
5	1	Gasket	113-531
6	2	Jack Screw	127-825
7	1	Gasket	113-532
8	2	Screw	127-697
9	1	Gasket	113-507

M27 26 Pin Round Connector Kit

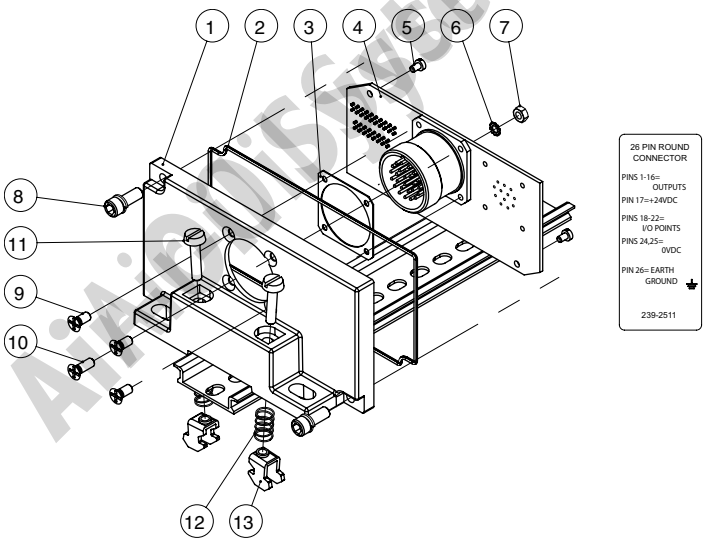

26 Pin ROUND CONNECTOR KIT	PART NO.
Without Din	239-2510
With Din	239-2511

DET. NO.	NO. REQ'D	PART NAME	PART NO.
1	1	Cover	105-408
2	1	Gasket	113-531
3	1	Gasket	113-353
4	1	26 Pin PCB Assy	156-624
5	2	Screw	127-875
6	1	Lock Washer	128-294
7	1	Hex Nut	128-293
8	2	Screw Assy	127-396
9	3	Screw	127-810
10	1	Screw	127-770
11	2	Screw (DIN RAL Only)	127-742
12	2	Spring (DIN RAL Only)	115-355
13	2	Clamp (DIN RAL Only)	125-720

Air Logic Systems, Inc. www.airlogic.com

25 Pin Sub-D Connector Kit

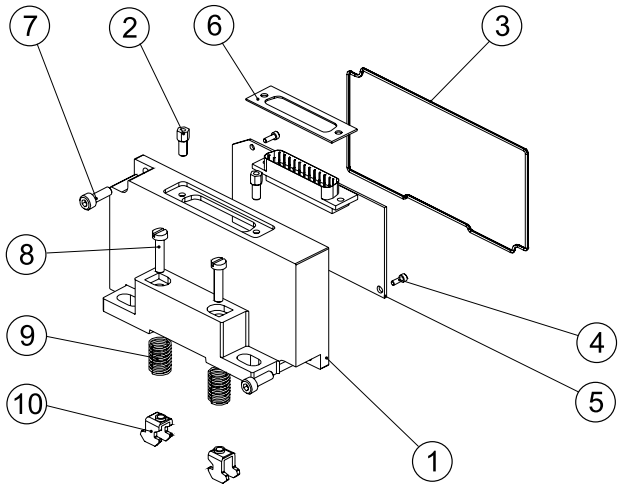

25 PIN SUB-D CONNECTOR

PINS 1-16= OUTPUTS
PIN 17=+24VDC

PINS 18-22= I/O POINTS
PINS 23,24= 0VDC

PIN 25= EARTH GROUND

NOTE: External fusing or output protection recommended.

25 PIN SUB-D HOUSING KITS	PART NO.
Without DIN Rail	239-2097
With DIN Rail	239-2513

DET. NO.	NO. REQ'D	PART NAME	PART NO.
1	1	Housing	105-401
2	2	Hex Screw	127-825
3	1	Gasket	113-531
4	2	Screw	127-318
5	1	PCB Ass'y	256-607
6	1	Gasket	113-507
7	2	Screw Ass'y	127-396
8	2	Screw (DIN Rail Only)	127-472
9	2	Spring (DIN Rail Only)	115-355
10	2	Clamp (DIN Rail Only)	125-720

37 Pin Sub-D Connector Kit

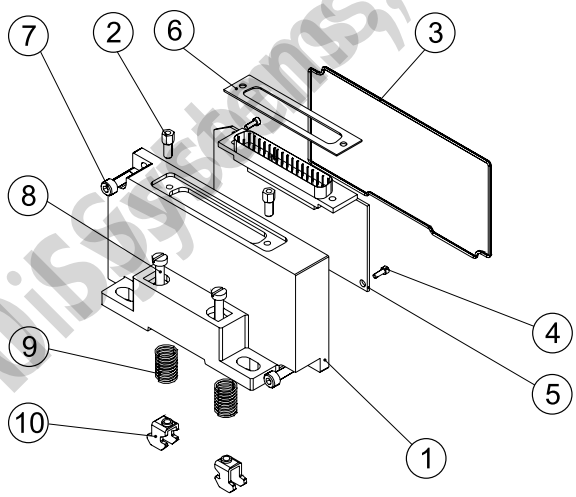

37 PIN SUB-D CONNECTOR

PINS 1-16= OUTPUTS
PIN 17=+24VDC

PINS 18-32= I/O POINTS
PINS 33-36= 0VDC

PIN 37= EARTH GROUND

NOTE: External fusing or output protection recommended.

37 PIN SUB-D HOUSING KITS	PART NO.
Without DIN Rail	239-2098
With DIN Rail	239-2512

DET. NO.	NO. REQ'D	PART NAME	PART NO.
1	1	Housing	105-402
2	2	Hex Screw	127-825
3	1	Gasket	113-531
4	2	Screw	127-318
5	1	PCB Ass'y	256-608
6	1	Gasket	113-530
7	2	Screw Ass'y	127-396
8	2	Screw (DIN Rail Only)	127-472
9	2	Spring (DIN Rail Only)	115-355
10	2	Clamp (DIN Rail Only)	125-720

www.airtrol.com
AirTrol Systems, Inc.

4 Pin **MINI** Power Cables for G2-2 Electronics

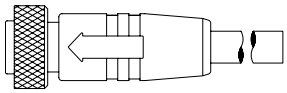

FEMALE 4 Pin STRAIGHT 18 AWG EURO COLOR CODE
1 Meter - MC0401MAF0000000
2 Meter - MC0402MAF0000000
5 Meter - MC0405MAF0000000

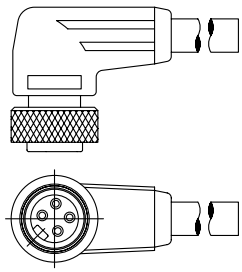

FEMALE 4 Pin 90° 18 AWG EURO COLOR CODE
1 Meter - MD0401MAF0000000
2 Meter - MD0402MAF0000000
5 Meter - MD0405MAF0000000

MINI 4 Pin Pin-Out

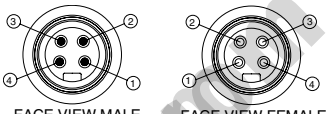

1 = Black
2 = Blue
3 = Brown
4 = White

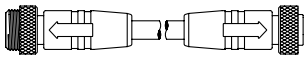

F/M 4 PIN STRAIGHT 18 AWG EURO COLOR CODE
1 Meter - MC0401MAFMA04000
2 Meter - MC0402MAFMA04000
5 Meter - MC0405MAFMA04000

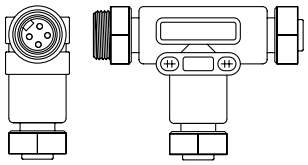

4 PIN “T”
MC0400000MT04000

TECHNICAL DATA	
Molded Body / Insert	PUR
Coupling Nut	Aluminum
Cable	PVC
Cable O.D.	0.290
Voltage Rating	300 V
Amperage	5.6 A
Protection	IP 68, NEMA 6P
Operating Temperature	-40°C to 90°C

AirAutoSystems, Inc. www.airautosystems.com

4 Pin **12mm (M12)** Power Cables for G2-1 Electronics

12mm 4 Pin Pin-Out

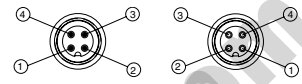

FACE VIEW MALE FACE VIEW FEMALE

1 = Black 3 = Brown
2 = Blue 4 = White

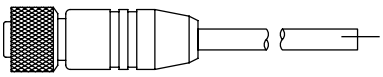

FEMALE 4 PIN STRAIGHT 18 AWG EURO COLOR CODE

1 Meter - TC0401MAE0000000
2 Meter - TC0402MAE0000000
5 Meter - TC0405MAE0000000

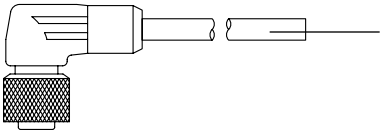

FEMALE 4 PIN 90° 18 AWG EURO COLOR CODE

1 Meter - TD0401MAE0000000
2 Meter - TD0402MAE0000000
5 Meter - TD0405MAE0000000

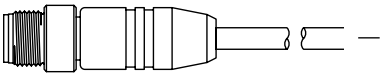

MALE 4 PIN STRAIGHT 18 AWG EURO COLOR CODE

1 Meter - TA0401MAE0000000
2 Meter - TA0402MAE0000000
5 Meter - TA0405MAE0000000

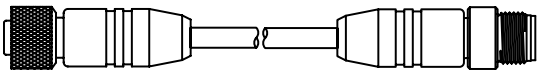

F/M 4 PIN STRAIGHT 18 AWG EURO COLOR CODE

1 Meter - TC0401MAETA04000
2 Meter - TC0402MAETA04000
5 Meter - TC0405MAETA04000

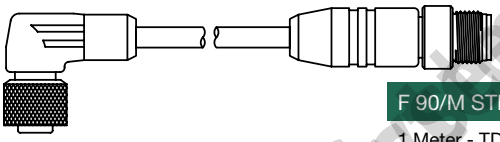

F 90/M STRAIGHT 18 AWG EURO COLOR CODE

1 Meter - TD0401MAETA04000
2 Meter - TD0402MAETA04000
5 Meter - TD0405MAETA04000

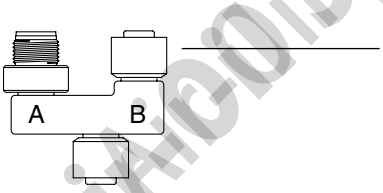

4/5 PIN “T” (POWER)

TC0500000TT05000

TECHNICAL DATA	
Molded Body / Insert	PUR
Coupling Nut	“T” - Aluminum
	Cables - Brass, Nickel Plated
Cable	PUR
Cable O.D.	0.190”
Voltage Rating	250 V
Amperage	4.0 A
Protection	IP 68, NEMA 6P
Operating Temperature	-40°C to 90°C

AiAiOiSystems, Inc. www.aiaiob.com

Information subject to change without notice. For ordering information or regarding your local sales office visit www.numatics.com.

Field Attachable Connectors 3, 4, and 5 Pin

MINI

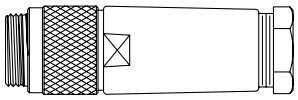

4 Pin MINI MALE STRAIGHT
PG 9 Cable Gland - MA04F20000000000
PG 13.5 Cable Gland - MA04F30000000000

5 Pin MINI MALE STRAIGHT
PG 9 Cable Gland - MA05F20000000000
PG 13.5 Cable Gland - MA05F30000000000

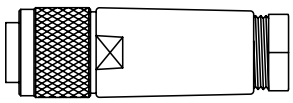

4 Pin MINI FEMALE STRAIGHT
PG 9 Cable Gland - MC04F20000000000
PG 13.5 Cable Gland - MC04F30000000000

5 Pin MINI FEMALE STRAIGHT
PG 9 Cable Gland - MC05F20000000000
PG 13.5 Cable Gland - MC05F30000000000

5 Pin MINI FEMALE STRAIGHT FOR RIO COMMUNICATION
PG 13.5 Cable Gland - MC05M20000000000

MINI 4 Pin Pin-Out

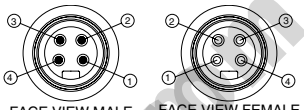

1 = Black 3 = Brown
2 = Blue 4 = White

MINI 5 Pin Pin-Out

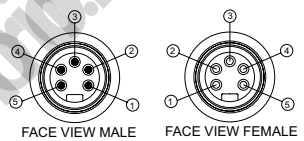

1 = Shield 2 = Red
3 = Black 4 = White
5 = Blue

– REMOTE I/O

12mm (M12)

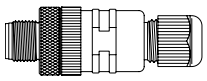

4 Pin 12mm MALE STRAIGHT
PG 7 Cable Gland - TA04F10000000000
PG 9 Cable Gland - TA04F20000000000

5 Pin 12mm MALE STRAIGHT
PG 7 Cable Gland - TA05F10000000000
PG 9 Cable Gland - TA05F20000000000

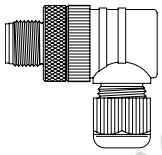

4 Pin 12mm MALE 90 DEGREE
PG 7 Cable Gland - TB04F10000000000
PG 9 Cable Gland - TB04F20000000000

5 Pin 12mm MALE 90 DEGREE
PG 7 Cable Gland - TB05F10000000000
PG 9 Cable Gland - TB05F20000000000

12mm 4 Pin Pin-Out

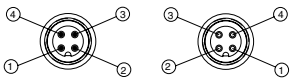

1 = Brown 3 = Blue
2 = White 4 = Black

12mm 5 Pin Pin-Out

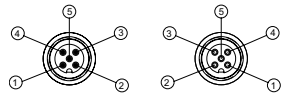

1 = Shield 2 = Red
3 = Black 4 = White
5 = Blue

TECHNICAL DATA	
Molded Body / Insert	Glass Filled Nylon/Nylon
Coupling Nut	Aluminum
Cable Range	PG9: 0.157-0.315 PG13.5: 0.394-0.472
Voltage Rating	600 V
Amperage	4 Pole - 9 A 5 Pole - 9 A
Protection	IP 67, NEMA 6P
Operating Temperature	-40°C to 90°C

AirCO Systems, Inc. www.aircoinc.com

Field Attachable Connectors 3, 4, and 5 Pin continued

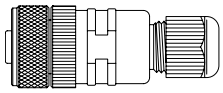

4 Pin 12mm FEMALE STRAIGHT
PG 7 Cable Gland - TC04F10000000000
PG 9 Cable Gland - TC04F20000000000

5 Pin 12mm FEMALE STRAIGHT
PG 7 Cable Gland - TC05F10000000000
PG 9 Cable Gland - TC05F20000000000

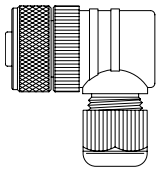

4 Pin 12mm FEMALE 90 DEGREE
PG 7 Cable Gland - TD04F10000000000
PG 9 Cable Gland - TD04F20000000000

5 Pin 12mm FEMALE 90 DEGREE
PG 7 Cable Gland - TD05F10000000000
PG 9 Cable Gland - TD05F20000000000

8mm (M8)

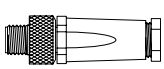

3 Pin 8mm MALE STRAIGHT
Cable Dia. 0.138 to 0.197 - PA03F00000000000

4 Pin 8mm MALE STRAIGHT
Cable Dia. 0.138 to 0.197 - PA04F00000000000

8mm 3 Pole Pin-Out

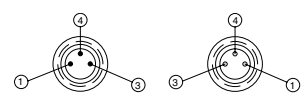

FACE VIEW MALE FACE VIEW FEMALE

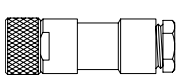

3 Pin 8mm FEMALE STRAIGHT
Cable Dia. 0.138 to 0.197 - PC03F00000000000

4 Pin 8mm FEMALE STRAIGHT
Cable Dia. 0.138 to 0.197 - PC04F00000000000

8mm 4 Pole Pin-Out

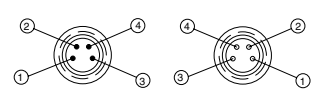

FACE VIEW MALE FACE VIEW FEMALE

TECHNICAL DATA - Micro 12 mm / Pico 8 mm	
12 mm Molded Body	Nylon
8 mm Molded Body	TPU
Insert	Nylon
Coupling Nut	12 mm Brass, Nickel Plated, 8 m CuZn, brass, nickeled
Cable Range	PG7: 0.119 - 0.255 PG9: 0.157 - 0.315 Pico 8 mm: 0.138 - 0.197
Voltage Rating	12 mm: 250 V 8 mm: 60 VAC/75 VDC
Amperage	4.0 A
Protection	IP 67, NEMA 6 (12 mm only)
Operating Temperature	-25°C to 85°C

AiAiO-DiSystems, Inc. www.aiaiob.com

Information subject to change without notice. For ordering information or regarding your local sales office visit www.numatics.com.

DeviceNet Trunk Cables, Drop Cables and Accessories

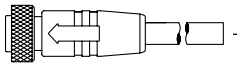

FEMALE MINI THICK CABLE

3 Foot - MC0503FFD0000000

6 Foot - MC0506FFD0000000

12 Foot - MC0512FFD0000000

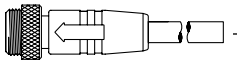

MALE MINI THICK CABLE

3 Foot - MA0503FFD0000000

6 Foot - MA0506FFD0000000

12 Foot - MA0512FFD0000000

FEMALE TO MALE MINI THICK CABLE EXTENSION

3 Foot - MC0503FFDMA05000

6 Foot - MC0506FFDMA05000

12 Foot - MC0512FFDMA05000

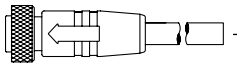

FEMALE MINI THIN CABLE

3 Foot - MC0503FGD0000000

6 Foot - MC0506FGD0000000

12 Foot - MC0512FGD0000000

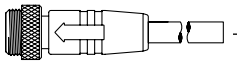

MALE MINI THIN CABLE

3 Foot - MA0503FGD0000000

6 Foot - MA0506FGD0000000

12 Foot - MA0512FGD0000000

FEMALE TO MALE MINI THIN CABLE EXTENSION

3 Foot - MC0503FGDMA05000

6 Foot - MC0506FGDMA05000

12 Foot - MC0512FGDMA05000

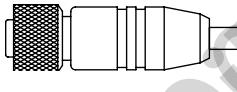

FEMALE 12mm THIN CABLE

3 Foot - TC0503FGD0000000

6 Foot - TC0506FGD0000000

12 Foot - TC0512FGD0000000

MINI Device Net 5 Pin Pin-Out

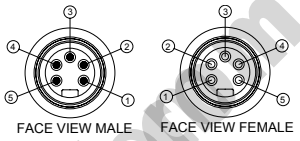

1 = Shield
3 = Black
5 = Blue

2 = Red
4 = White

12mm Device Net 5 Pin Pin-Out

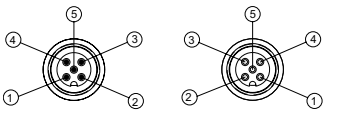

1 = Shield
3 = Black
5 = Blue

2 = Red
4 = White

AirAutoSystems, Inc. www.airauto.com

DeviceNet Trunk Cables, Drop Cables and Accessories continued

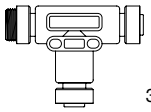

3 WAY MINI "T"

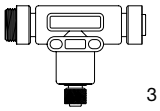

3 WAY MINI/12mm "T"

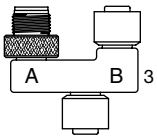

3 WAY 12mm "T"

DEVICENET T'S
3 Way MINI "T" - MC0500000MT05000
3 Way MINI - 12mm "T" - TC0500000MT05000
3 Way 12mm "T" - TC0500000TT05000

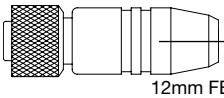

12mm FEMALE

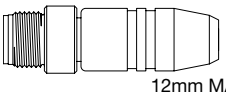

12mm MALE

TERMINATING RESISTORS
12mm Female - TC05TR00000000
12mm Male - TA05TR00000000
MINI Female - MC05TR00000000
MINI Male - MA05TR00000000

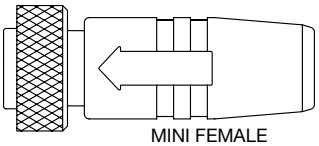

MINI FEMALE

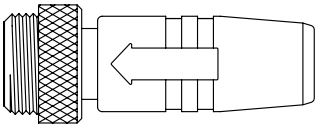

MINI MALE

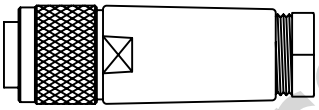

FEMALE MINI FIELD ATTACHABLE
PG 9 Cable Gland - MC05F200D0000000
PG 13.5 Cable Gland - MC05F300D0000000

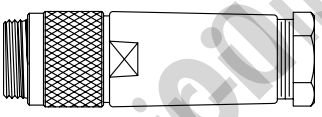

MALE MINI FIELD ATTACHABLE
PG 9 Cable Gland - MA05F200D0000000
PG 13.5 Cable Gland - MA05F300D0000000

NOTE: Color coded for DeviceNet.

MALE MINI FIELD ATTACHABLE	
Molded Body / Insert	PUR
Coupling Nut	Mini - Aluminum
	Micro - Nickel Plated Brass
Cable	PVC
Cable O.D.	Thick - 0.475" Thin - 0.275"
Voltage Rating	Mini - 300 V Micro - 150 V
Amperage	Thick - 8.0 A Thin - 2.4 A
Protection	IP 68, NEMA 6P
Operating Temperature	-20 C to 90 C

AirAutoSystems, Inc. www.airauto.com

Information subject to change without notice. For ordering information or regarding your local sales office visit www.numatics.com.

Profibus Cables and Accessories (Reverse Key)

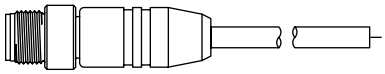

MALE 12mm REVERSE KEY SINGLE ENDED
1 Meter - RA0501MHP0000000
2 Meter - RA0502MHP0000000
5 Meter - RA0505MHP0000000

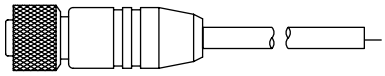

FEMALE 12mm REVERSE KEY SINGLE ENDED
1 Meter - RC0501MHP0000000
2 Meter - RC0502MHP0000000
5 Meter - RC0505MHP0000000

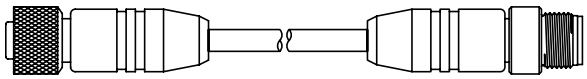

F/M 12mm REVERSE KEY DOUBLE ENDED
1 Meter - RC0501MHPRA05000
2 Meter - RC0502MHPRA05000
5 Meter - RC0505MHPRA05000

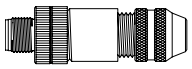

MALE

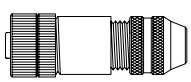

FEMALE

FIELD ATTACHABLE CONNECTORS
Male - RA05F200P0000000
Female - RC05F200P0000000

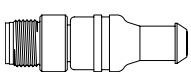

TERMINATING RESISTORS
Male - RA05TR00000000

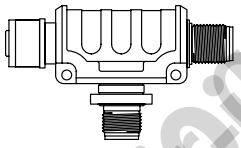

BUS "T"
RA050000PRT05000

12mm Profibus
Reverse Key 5 Pin
Pin-Out

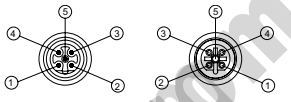

FACE VIEW MALE FACE VIEW FEMALE

1 = N/C 2 = Green
3 = N/C 3 = Red
5 = Shield

TECHNICAL DATA	
Molded Body / Insert	Cable=PUR, Field Attachable=PA
Coupling Nut	Nickel Plated
Cable	PUR
Voltage Rating	Cable=250 V, Field Attachable=30 VAC/36 VDC
Amperage	Field Attachable=4.0 A
Protection	Cable=IP67/68/NEMA 6P, Field Attachable=IP67
Operating Temperature	-40°C to 80°C Static, -5° to 80°C Moving
Cable Range	0-16" - 0.240"

AiAiO-DiSSystems, Inc. www.aiaiob.com

AS-i Cables/Connectors

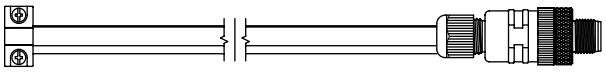

AS-i Addressing Cable – 3 feet

230-1171

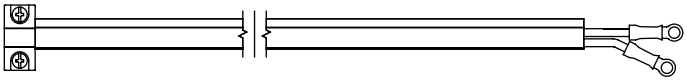

AS-i Power Cable – 3 feet

230-1172

AS-i Connector

230-1036

AiAiO-DiSystems, Inc. www.aiaiodi.com

TECHNICAL DATA	Vampire Connector	12 mm Connector	AS-i Cable
Molded Body / Insert	PUR	Nylon	N/A
Coupling Nut	N/A	Brass, Ni Plated	N/A
Cable	N/A	N/A	EPR (ethylene-propylene)
Cable O.D.	N/A	4-8 mm	2x1.5 mm^2
Voltage Rating	N/A	125 V	N/A
Amperage	N/A	4.0 A	N/A
Degree of Protection	IP67	IP67	IP67
Operating Temp	-20˚C – +70˚C	-30˚C – +85˚C	-30˚C – +90˚C

Information subject to change without notice. For ordering information or regarding your local sales office visit www.numatics.com.

Ethernet Cables - RJ45

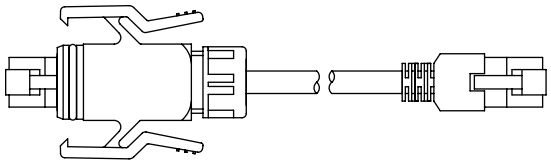

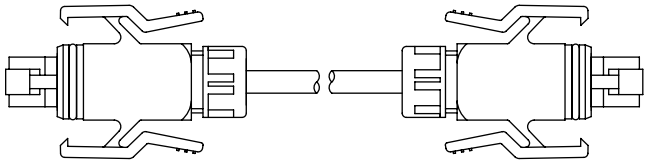

RJ45 to IP65 RJ45 Ethernet Cables – Double Ended (Line)	
5 Meter	VA0805MK0YA08000
10 Meter	VA0810MK0YA08000

RJ45 to IP65 RJ45 Ethernet Cables – Double Ended (Crossover)	
5 Meter	VA0805ML0YA08000
10 Meter	VA0810ML0YA08000

IP65 RJ45 Ethernet Cables – Double Ended (Line)	
5 Meter	YA0805MK0YA08000
10 Meter	YA0810MK0YA08000

IP65 RJ45 Ethernet Cables – Double Ended (Crossover)	
5 Meter	YA0805ML0YA08000
10 Meter	YA0810ML0YA08000

Ethernet Cables - 12 mm (M12) D-Coded

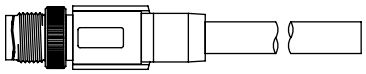

Ethernet 4 Pin D-Coded 12 mm – Single Ended	
5 Meter	QA0405MK00000000
10 Meter	QA0410MK00000000

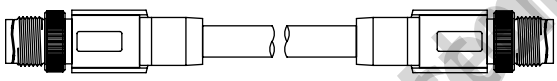

Ethernet 4 Pin D-Coded 12 mm – Double Ended	
5 Meter	QA0405MK0QA04000
10 Meter	QA0410MK0QA04000

12 mm EtherNet IP 4 Pin D-Coded MALE

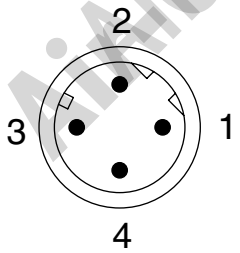

Face View MALE

PIN 1 = White (Orange) = TD +
PIN 2 = White (Blue) = TD –
PIN 3 = Orange = RD +
PIN 4 = Blue = RD –

Technical Data	RJ45 Cable	12 mm Cable
Molded Body/Insert	PA	PUR
Coupling Nut	N/A	Brass, Ni Plated
Cable	HM2	PUR
Cable O.D.	.220" to .232"	.320"
Voltage Rating	N/A	125 V
Amperage	N/A	4.0 A
Degree of Protection	IP67	IP65
Operating Temp	0°C – 70°C	0°C – 50°C

AirCon Systems, Inc. www.airconinc.com

I/O Cables, Splitters and Accessories

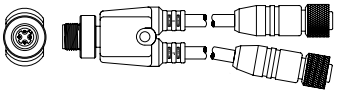

12mm DC SPLITTER 2 STRAIGHT 12mm FEMALE CONNECTORS

1 Meter - TA0401MC0JC05000

2 Meter - TA0402MC0JC05000

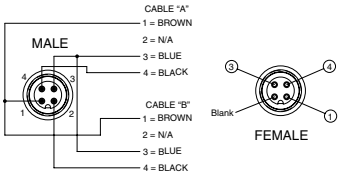

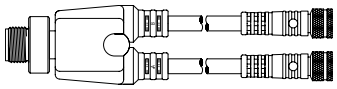

12mm DC SPLITTER 2 STRAIGHT 8mm FEMALE CONNECTORS

1 Meter - TA0401MI0KC03000

2 Meter - TA0402MI0KC03000

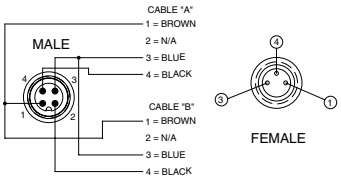

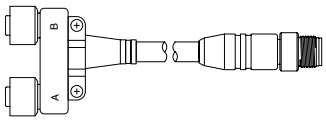

12mm DC "Y" WITH MALE CABLE

0.3 Meter - TA0401FJ0FC04000

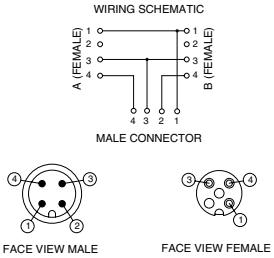

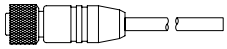

12mm FEMALE 4 PIN STRAIGHT 22 AWG EURO COLOR CODE

2 Meter - TC0402MCE0000000

5 Meter - TC0405MCE0000000

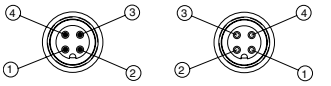

1 = Black 3 = Brown
2 = Blue 4 = White

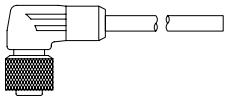

12mm FEMALE 4 PIN 90 DEGREE 22 AWG EURO COLOR CODE

2 Meter - TD0402MCE0000000

5 Meter - TD0405MCE0000000

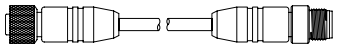

12mm F/M 4 PIN STRAIGHT 22 AWG EURO COLOR CODE

1 Meter - TC0401MC0TA04000

2 Meter - TC0402MC0TA04000

5 Meter - TC0405MC0TA04000

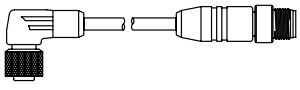

12mm F 90°/M STRAIGHT 22 AWG EURO COLOR CODE

1 Meter - TD0401MC0TA04000

2 Meter - TD0402MC0TA04000

5 Meter - TD0405MC0TA04000

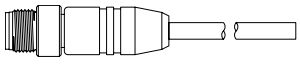

12mm MALE 4 PIN STRAIGHT 22 AWG EURO COLOR CODE

2 Meter - TA0402MCE0000000

5 Meter - TA0405MCE0000000

Information subject to change without notice. For ordering information or regarding your local sales office visit www.numatics.com.

I/O Cables, Splitters and Accessories continued

8mm 3 Pin Pin-Out

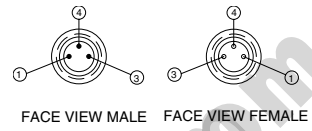

FACE VIEW MALE FACE VIEW FEMALE

1 = Brown 3 = Blue
4 = Black

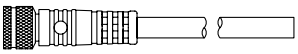

8mm FEMALE 3 PIN STRAIGHT 26 AWG EURO COLOR CODE
2 Meter - PC0302MEE0000000
5 Meter - PC0305MEE0000000

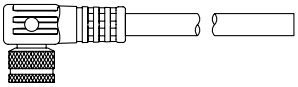

8mm FEMALE 3 PIN 90° 26 AWG EURO COLOR CODE
2 Meter - PD0302MEE0000000
5 Meter - PD0305MEE0000000

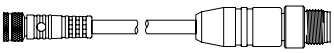

12mm MALE/8mm FEMALE 3 PIN 26 AWG EURO COLOR CODE
2 Meter - TA0302ME0PC03000
5 Meter - TA0305ME0PC03000

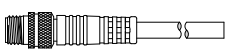

8mm MALE 3 PIN STRAIGHT 26 AWG EURO COLOR CODE
2 Meter - PA0302MEE0000000
5 Meter - PA0305MEE0000000

AiAiO-DiSystems, Inc. www.aiaiodi.com

M23 & M27 Round Cable Assemblies

M23 12 Pin Cables – Single Ended

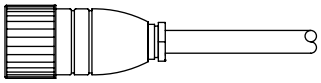

M23 12 Pin Cable Assy., **Female**, 22 AWG	
5 Meter	CC1205MI00000000
10 Meter	CC1210MI00000000
Female Connector (solder cups)	CC12000000000000

M23 12 Pin Cables – Double Ended

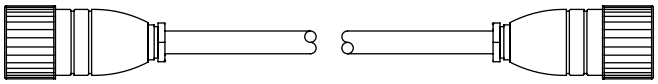

M23 12 Pin Cable Assy., **Female-to-Male**, 22 AWG	
2 Meter	CC1202MI0CE12000
5 Meter	CC1205MI0CE12000
10 Meter	CC1210MI0CE12000

M23 19 Pin Cables – Single Ended

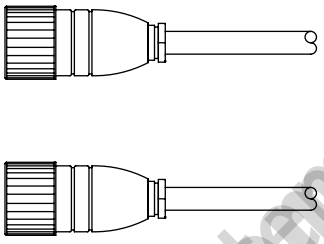

M23 19 Pin Cable Assy., **Female**, 22 AWG	
5 Meter	CC1905MI00000000
10 Meter	CC1910MI00000000
Female Connector (solder cups)	CC19000000000000

M23 19 Pin Cable Assy., **Male**, 22 AWG	
5 Meter	CE1905MI00000000
10 Meter	CE1910MI00000000

M23 19 Pin Cables – Double Ended

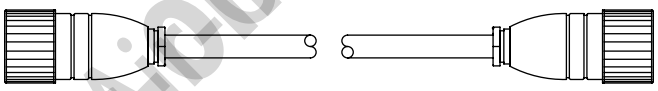

M23 19 Pole Cable Assy., **Female-to-Male**, 22 AWG	
2 Meter	CC1902MI0CE19000
5 Meter	CC1905MI0CE19000
10 Meter	CC1910MI0CE19000

M23-12 Pin Connector Configuration

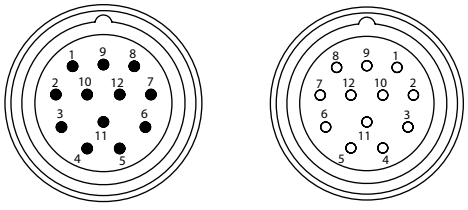

Male Female

M23-19 Pin Connector Configuration

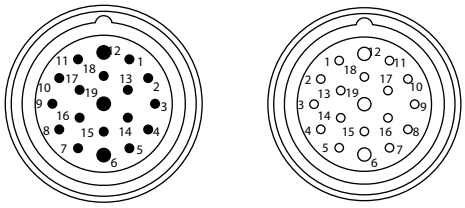

Male Female

AirFOS Systems, Inc. www.airfos.com

M23 & M27 Round Cable Assemblies

M27 26 Pin Cables – Single Ended

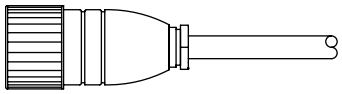

M27 26 Pin Cable Assy., **Female**, 22 AWG	
5 Meter	CC2605MI00000000
10 Meter	CC2610MI00000000
Female Connector (solder cups)	CC26000000000000

M27 26 Pin Cables – Double Ended

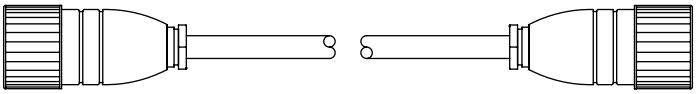

M27 26 Pin Cable Assy., **Female**, 22 AWG	
2 Meter	CC2602MI0CE26000
5 Meter	CC2605MI0CE26000
10 Meter	CC2610MI0CE26000

26 Pin Connector Configuration

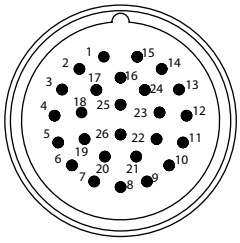

Male

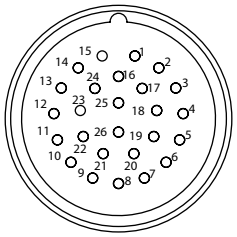

Female

Note: Go to www.numatics.com/wiringdiagrams for wiring information

Pin Out Color Code for M23 & M27 Cables			
M23 Cables		M27 Cables	
Pin #1	White	Pin #1	White
Pin #2	Brown	Pin #2	Brown
Pin #3	Green	Pin #3	Green
Pin #4	Yellow	Pin #4	Yellow
Pin #5	Gray	Pin #5	Gray
Pin #6	Pink	Pin #6	Pink
Pin #7	Blue	Pin #7	Blue
Pin #8	Red	Pin #8	Green/Yellow
Pin #9	Black	Pin #9	Black
Pin #10	Violet	Pin #10	Purple
Pin #11	Gray/Pink	Pin #11	Gray/Pink
Pin #12	Green/Yellow	Pin #12	Red/Blue
Pin #13	White/Green	Pin #13	White/Green
Pin #14	Brown/Green	Pin #14	Brown/Green
Pin #15	White/Yellow	Pin #15	White/Yellow
Pin #16	Yellow/Brown	Pin #16	Yellow/Brown
Pin #17	White/Grey	Pin #17	White/Grey
Pin #18	Gray/Brown	Pin #18	Gray/Brown
Pin #19	Red/Blue	Pin #19	White/Pink
		Pin #20	Pink/Brown
		Pin #21	White/Blue
		Pin #22	Brown/Blue
		Pin #23	White/Red
		Pin #24	Brown/Red
		Pin #25	White/Black
		Pin #26	Brown/Black

Technical Data	
Molded Body/Insert	PUR
Coupling Nut	Brass, Ni Plated
Cable	PUR
Cable O.D.	.220"
Voltage Rating	150 V
Amperage	8.0 A
Degree of Protection	IP68 (mated)
Operating Temp	40°C – 125°C
Wire AWG	22

www.airlogix.com
Airlogix Systems, Inc.

Sub-D Cables

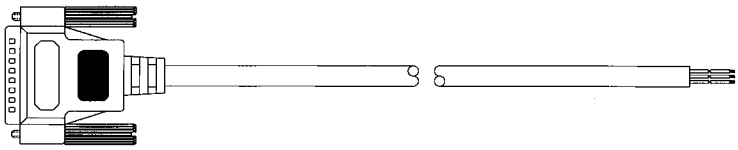

25 Pin SUB-D MALE CABLE 22 AWG - UNSHIELDED

2 Meter - SA2502MCX0000000

5 Meter - SA2505MCX0000000

10 Meter - SA2510MCX0000000

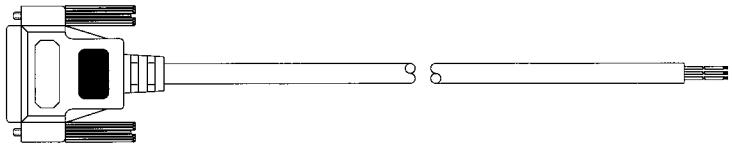

25 Pin SUB-D FEMALE CABLE 22 AWG - UNSHIELDED

2 Meter - SC2502MCX0000000

5 Meter - SC2505MCX0000000

10 Meter - SC2510MCX0000000

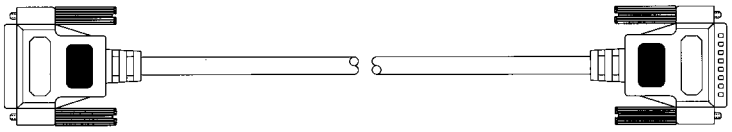

25 Pin SUB-D MALE/FEMALE CABLE 22 AWG - UNSHIELDED

2 Meter - SA2502MCXSC25000

5 Meter - SA2505MCXSC25000

10 Meter - SA2510MCXSC25000

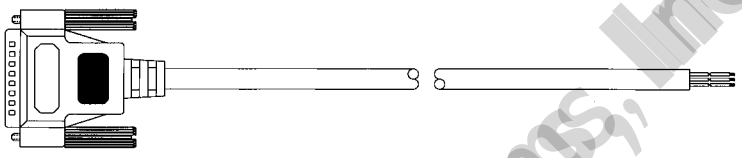

25 Pin SUB-D MALE CABLE 24 AWG - SHIELDED

2 Meter - SA2502MDX0000000

5 Meter - SA2505MDX0000000

10 Meter - SA2510MDX0000000

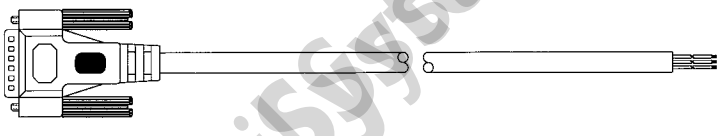

15 Pin SUB-D MALE CABLE 24 AWG - SHIELDED

2 Meter - SA1502MDX0000000

5 Meter - SA1505MDX0000000

10 Meter - SA1510MDX0000000

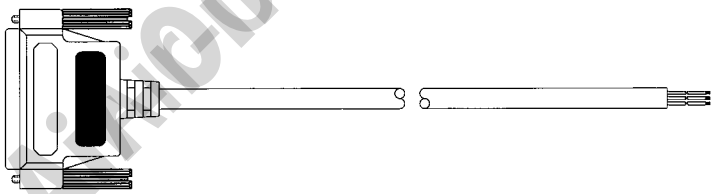

37 Pin SUB-D FEMALE CABLE 22 AWG - UNSHIELDED

2 Meter - SC3702MCX0000000

5 Meter - SC3705MCX0000000

10 Meter - SC3710MCX0000000

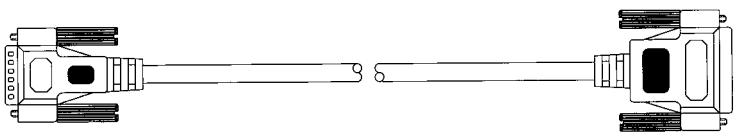

15 Pin MALE/25 Pin FEMALE SUB-D CABLE 22 AWG - UNSHIELDED

2 Meter - SA1502MCXSC25000

5 Meter - SA1505MCXSC25000

10 Meter - SA1510MCXSC25000

Go to www.numatics.com/wiringdiagrams for wiring information

AutoDiSystems, Inc. www.autodi.com

Information subject to change without notice. For ordering information or regarding your local sales office visit www.numatics.com.

Sub-D Cables continued

25 Pin-Out

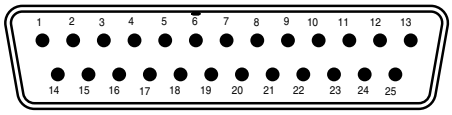

15 Pin-Out

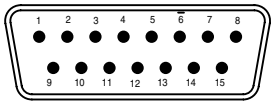

37 Pin-Out

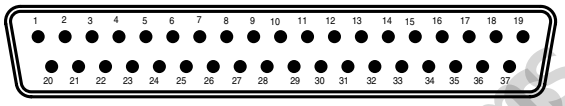

TECHNICAL DATA	
Connector Body	PVC
Cable	PVC
Cable O.D.	37 Conductor, 22 AWG - N/A
Cable O.D.	25 Conductor, 22 AWG - 0.394”
Cable O.D.	25 Conductor, 24 AWG - 0.335”
Cable O.D.	15 Conductor, 24 AWG - 0.256”
Voltage Rating	300 V
Amperage	2.0 Amps/Conductor
Degree of Protection	25 Conductor, 22 AWG - 2.0 A/Conductor
Operating Temperature	Max 80°C
Jack Screws	4-40 Thread

CONNECTOR (CABLE)	CONDUCTOR
Pin 1	Black
Pin 2	White
Pin 3	Red
Pin 4	Green
Pin 5	Orange
Pin 6	Blue
Pin 7	White/Black
Pin 8	Red/Black
Pin 9	Green/Black
Pin 10	Orange/Black
Pin 11	Blue/Black
Pin 12	Black/White
Pin 13	Red/White
Pin 14	Green/White
Pin 15	Blue/White
Pin 16	Black/Red
Pin 17	White/Red
Pin 18	Orange/Red
Pin 19	Blue/Red
Pin 20	Red/Green
Pin 21	Orange/Green
Pin 22	Black/White/Red or Brown/White
Pin 23	White/Black/Red or Yellow/Black
Pin 24	Red/Black/White or Violet/White
Pin 25	Green/Black/White or Gray/Black
Pin 26	Orange/Black/White or Yellow
Pin 27	Blue/Black/White or Violet
Pin 28	Black/Red/Green or Gray
Pin 29	White/Red/Green or Pink
Pin 30	Red/Black/Green or Light Green
Pin 31	Green/Black/Orange or Orange/ White
Pin 32	Orange/Black/Green or Pink/Black
Pin 33	Blue/White/Orange or Pink/Green
Pin 34	Black/White/Orange or Pink/Red
Pin 35	White/Red/Orange or Pink/Violet
Pin 36	Orange/ White/Blue or Light Blue
Pin 37	White/Red/Blue or Light Brown
Not Used	Black/White/Green
Not Used	White/Black/Green
Not Used	Red/White/Green

AiAiOOiSSystems, Inc. www.aiaiobidoro.com

Input Distribution Boxes

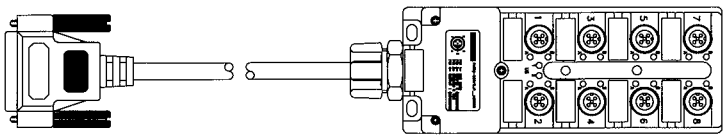

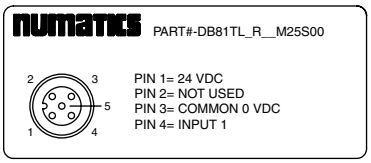

25 Pin SUB-D CONNECTOR. SINGLE POINT - 8 INPUTS
8 Port Distribution Box - 5 Pin 3 Wire/LED - NPN (Sinking)
2 Meters - DB81TLNR02M25S00
5 Meters - DB81TLNR05M25S00
10 Meters - DB81TLNR10M25S00
8 Port Distribution Box - 5 Pin 3 Wire/LED - PNP (Sourcing)
2 Meters - DB81TLPR02M25S00
5 Meters - DB81TLPR05M25S00
10 Meters - DB81TLPR10M25S00

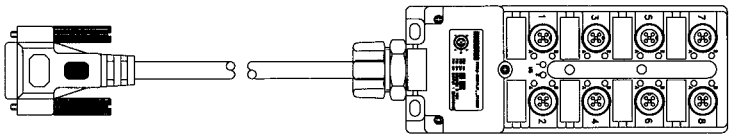

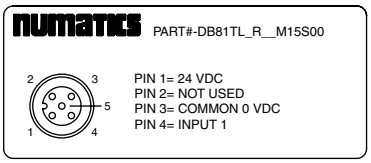

15 Pin SUB-D CONNECTOR. SINGLE POINT - 8 INPUTS
8 Port Distribution Box - 5 Pin 3 Wire/LED - NPN (Sinking)
2 Meters - DB81TLNR02M15S00
5 Meters - DB81TLNR05M15S00
10 Meters - DB81TLNR10M15S00
8 Port Distribution Box - 5 Pin 3 Wire/LED - PNP (Sourcing)
2 Meters - DB81TLPR02M15S00
5 Meters - DB81TLPR05M15S00
10 Meters - DB81TLPR10M15S00

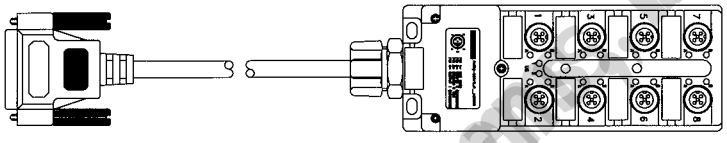

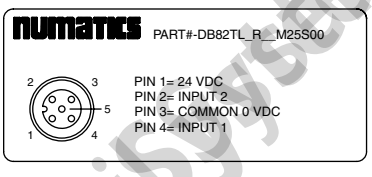

25 Pin SUB-D CONNECTOR. DOUBLE POINT - 16 INPUTS
8 Port Distribution Box - 5 Pin 4 Wire/LED - NPN (Sinking)
2 Meters - DB82TLNR02M25S00
5 Meters - DB82TLNR05M25S00
10 Meters - DB82TLNR10M25S00
8 Port Distribution Box - 5 Pin 4 Wire/LED - PNP (Sourcing)
2 Meters - DB82TLPR02M25S00
5 Meters - DB82TLPR05M25S00
10 Meters - DB82TLPR10M25S00

Go to www.numatics.com/wiringdiagrams for wiring information

AirAirOilSystems, Inc. www.airoil.com

Information subject to change without notice. For ordering information or regarding your local sales office visit www.numatics.com.

Output Distribution Boxes

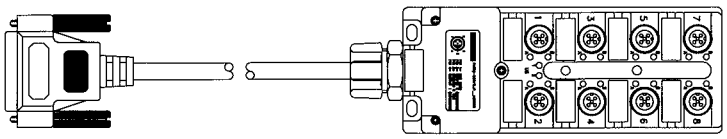

25 Pin SUB-D CONNECTOR SINGLE POINT - 8 OUTPUTS
8 Port Distribution Box - 5 Pin 3 Wire/LED - PNP (Sourcing)
2 Meters - DB81TLJP02M25S00
5 Meters - DB81TLJP05M25S00
10 Meters - DB81TLJP10M25S00

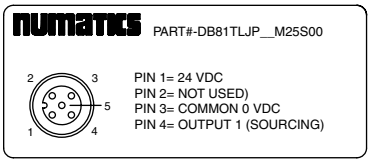

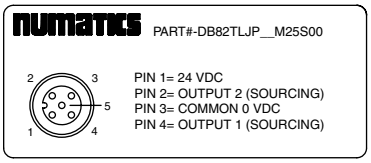

25 Pin SUB-D CONNECTOR DOUBLE POINT - 16 OUTPUTS
8 Port Distribution Box - 5 Pin 4 Wire/LED - PNP (Sourcing)
2 Meters - DB82TLJP02M25S00
5 Meters - DB82TLJP05M25S00
10 Meters - DB82TLJP10M25S00

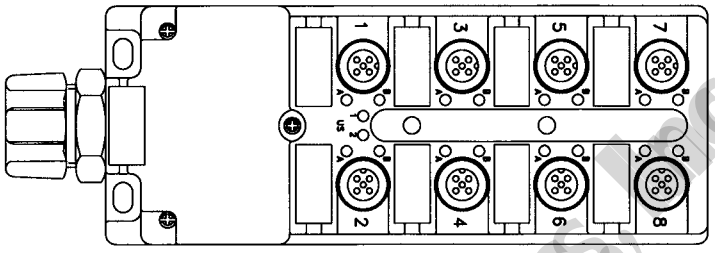

D-BOXES WITHOUT CABLE - UNIVERSAL
8 Port Block - 5 Pin w/ LED's - NPN
DB82TLN000000000
8 Port Block - 5 Pin w/ LED's - PNP
DB82TLP000000000
8 Port Block - 5 Pin without LED's - Universal
DB82T0U000000000

Go to www.numatics.com/wiringdiagrams for wiring information

TECHNICAL DATA	
Molded Body/Housing	Pocan PBT
Threaded Sleeve	CuZn, Nickel Plated
Voltage Rating	10 - 30 VDC
Amperage	2 A per Signal
Protection	IP 68, NEMA 6P
Operating Temperature	-20°C to 90°C
Wire Range	26 - 24 AWG

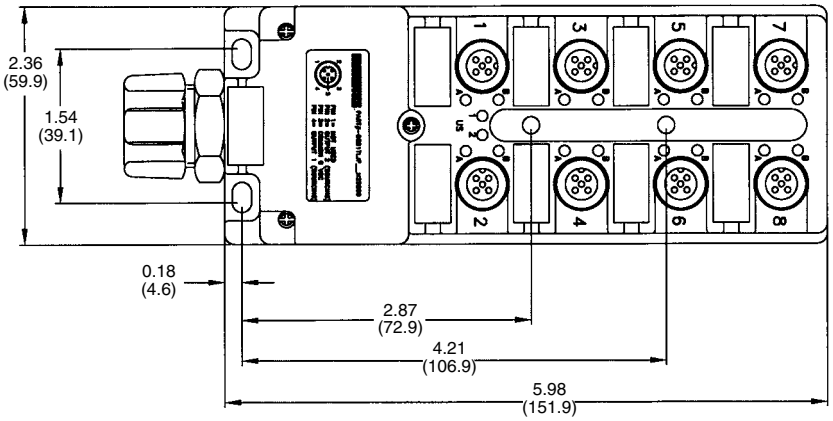

AIRCO Systems, Inc. www.aircoinc.com

numatics

World Class Supplier of Pneumatic Components

World Headquarters
Numatics Incorporated
Phone: 248-887-4111
Fax: 248-887-9190

UNITED STATES

Numatics – Air Preparation
Phone: 810-667-3900
Fax: 810-667-3902

Numatics – Valves
Phone: 248-887-4111
Fax: 248-887-9190

Numatics – Miniature Valves
Phone: 248-960-1400
Fax: 248-960-2160

Numatics – Cylinders
Phone: 615-771-1200
Fax: 615-771-1201

Numatics – Rodless Cylinders
Phone: 519-452-1777
Fax: 519-452-3995

Numatics – Automation
Phone: 440-934-3200
Fax: 440-934-2288

CANADA

Ontario
Numatics, Ltd.
Phone: 519-452-1777
Fax: 519-452-3995

Quebec
Numatics, Ltd.
Phone: 514-332-6444
Fax: 514-332-9273

British Columbia
Numatics, Ltd.
Phone: 604-574-0401
Fax: 604-574-3713

EUROPE

Germany – European Headquarters
Numatics GmbH
Phone: 011-49-22 41-31 60-0
Fax: 011-49-22 41-31 60 40

Hungary
Numatics Kft.
Phone: 011-36-13 82 21 35
Fax: 011-36-12 04 39 47

EUROPE

England
Numatics Limited
Phone: 011-44-1525-37 07 35
Fax: 011-44-1525-38 25 67

France
Numatics s.a.r.l.
Phone: 011-33-1 41 21 48 88
Fax: 011-33-1 41 21 48 89

Italy
Numatics srl
Phone: 011-39-030-373 19 99
Fax: 011-39-030-373 19 81

Netherlands
Numatics B.V.
Phone: 011-31-418-65 29 50
Fax: 011-31-418-65 29 43

Spain
Numatics Spain S.L.
Phone: 011-34-93-221 21 96
Fax: 011-34-93-221 35 14

AFRICA

South Africa
Numatics SA (Pty) Ltd.
Phone: 011-27-11-8 65 44 52
Fax: 011-27-11-8 65 42 90

LATIN & SOUTH AMERICA

Mexico
Numatics de Mexico S.A. de C.V.
Phone: 011-52-222-284 6176
Fax: 011-52-222-284 6179

Brazil
Valvair Comercial Ltda.
Phone: 011-55-12-351 2874
Fax: 011-55-12-351 1958

ASIA & PACIFIC

Australia
Numatics Australia Pty. Ltd.
Phone: 011-61-3-95 63 86 00
Fax: 011-61-3-95 63 85 11

Taiwan – Asian Headquarters
Numatics Co, Ltd. Asia
Phone: 011-886-2-29 15 16 05
Fax: 011-886-2-29 14 18 97

For a comprehensive listing of all Numatics production and distribution facilities worldwide, visit www.numatics.com

AutoDiSystems, Inc. www.autodi.com